GP-425
REVISION G
Amend 2

FLUID FITTING ENGINEERING STANDARDS

The information contained in the document is technical in content, but not technical data as defined by the ITAR or the EAR and therefore is **EAR 99 NLR; no export license required.** (General Prohibition Six (Embargo) applies to all items subject to the EAR, i.e. both items on the CCL and within EAR 99 – NLR. **You may not make an export or re-export contrary to the provisions of part 746 (Embargos and Other Special Controls) of the EAR and 22 CFR part 126.1 of the ITAR.) EDDS # 7323**

FEBRUARY 6, 2009

ENGINEERING DEVELOPMENT DIRECTORATE

National Aeronautics and
Space Administration

John F. Kennedy Space Center

KSC FORM 16-12 (REV. 6/95) PREVIOUS EDITIONS ARE OBSOLETE

GP-425
REVISION G
Amend 2

FLUID FITTING ENGINEERING STANDARDS

Prepared by:

3/16/09
Richard K. Snyder
NE-F2

Prepared by:

3/16/09
Richard Bukac
NE-F2

Approved by:

Eric A. Thaxton, NE-D
Chief, Mechanical Engineer

Approved by:

Patrick A. Simpkins, D.B.A.
Director, Engineering Directorate

FEBRUARY 6, 2009

JOHN F. KENNEDY SPACE CENTER, NASA

GP-425
Rev. G
Amend 2

RECORD OF REVISIONS/CHANGES

REV LTR	CHANGE NO.	DESCRIPTION	DATE
F		General Revision of entire document	August 1, 1990
	1	None	Not released
	2	Updated introduction, indexes, KC150, KC164	January 2, 1991
	3	Updated KC143, KC154, KC170, KC174, KC176	April 10, 1991
	4	Updated KC149, KC155 thru KC160, KC162, KC166 thru KC168, KC175	October 2, 1992
G		1. Incorporated Amendments 1 thru 4 2. Added Nongovernmental Equivalent Standards to various KC Fluid Fitting Standards 3. Updated KC104, KC105, KC115, KC118, KC131, KC144, KC150, KC152, KC164, KC175, and KC176	September 8, 1997
	1	Updated KC142, KC143, KC145, KC146, KC147, KC148, KC149, KC151 and KC152	May 1, 2007
	2	1. Updated cover page, indexes, approval page, record of revisions, KC116 and KC152 2. Added Appendix A and B; Change Justification Reports	February 6, 2009

LIST OF EFFECTIVE PAGES

Insert latest changes; destroy superseded pages

TOTAL NUMBER OF PAGES IN THIS DOCUMENT IS 138, CONSISTING OF:

Page No.(Standard)	Issue
i thru iii	May 1, 2007
iv (blank)	May 1, 2007
v thru xi	September 8, 1997
xii (blank)	September 8, 1997
1 thru 52	September 8, 1999
53 (KC142 sheet 1)	May 1, 2007
54 (KC143 sheet 1)	May 1, 2007
55 thru 57	September 8, 1997
58 (KC145 sheet 1)	May 1, 2007
59 (KC145 sheet 2)	May 1, 2007
60 (KC146 sheet 1)	May 1, 2007
61 (KC146 sheet 2)	May 1, 2007
62 (KC147 sheet 1)	May 1, 2007
63 (KC147 sheet 2)	May 1, 2007
64 (KC148 sheet 1)	May 1, 2007
65 (KC148 sheet 2)	May 1, 2007
66 (KC149 sheet 1)	May 1, 2007
67 (KC149 sheet 2)	May 1, 2007
68 thru 69	September 8, 1997
70 (KC151 sheet 1)	May 1, 2007
71 (KC151 sheet 2)	May 1, 2007
20 (KC116 sheet 1)	February 6, 2009
21 (KC116 sheet 2)	February 6, 2009
72 (KC152 sheet 1)	February 6, 2009
73 (KC152 sheet 2)	February 6, 2009
74 (KC152 sheet 3)	February 6, 2009
123 (Appendix cover page)	February 6, 2009
124 (Appendix A)	February 6, 2009
125 (Appendix B)	February 6, 2009
126 (Appendix B cont'd)	February 6, 2009

PICTORIAL INDEX

SEAL RING 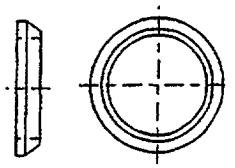 KC103 AS1097	BULKHEAD - FLARED TUBE 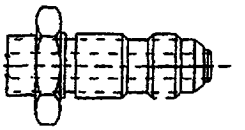 KC104 AS1099	FITTING END - FLARED TUBE 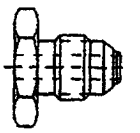 KC105 AS1098
REDUCER - ADAPTER 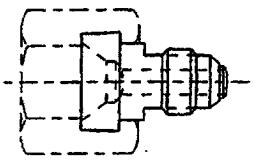 KC106 AS4301	TEE -0 FEMAIL SWIVEL ON RUN 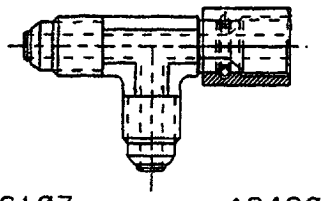 KC107 AS4302	ELBOW - 90° ADJ MALE END 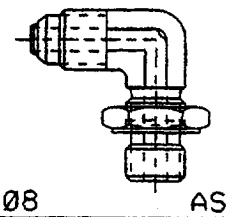 KC108 AS4303
TEE - FEMALE SWIVEL ON LEG 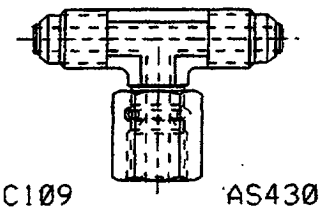 KC109 AS4304	TEE - ADJ MALE END ON RUN 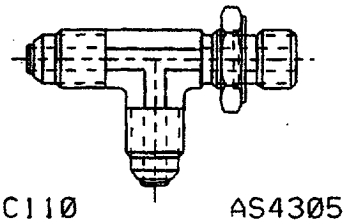 KC110 AS4305	TEE - ADJ MALE END ON LEG 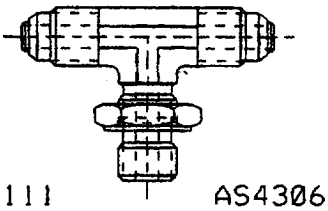 KC111 AS4306
ADAPTER - BOSS TO TUBE 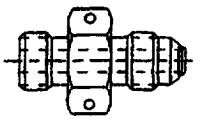 KC112 AS4307	ELBOW - 90° BULKHEAD 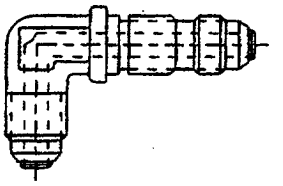 KC113 AS1366	TEE - BULKHEAN ON RUN 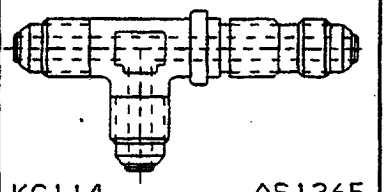 KC114 AS1365
BUSHING - EXPANDER 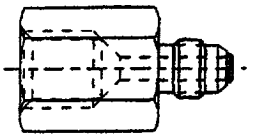 KC115 AS4308	NIPPLE - TUBE TO PIPE 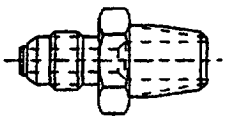 KC116 AS4309	CROSS 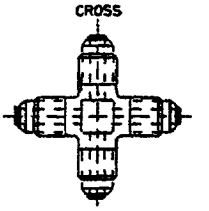 KC117 AS1367
ELBOW - 90° 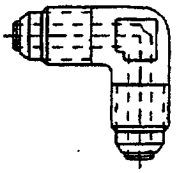 KC118 AS1250	TEE - INTERNAL THREAD ON RUN 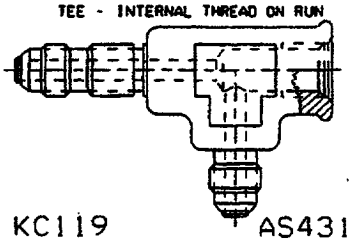 KC119 AS4310	TEE - INTERNAL 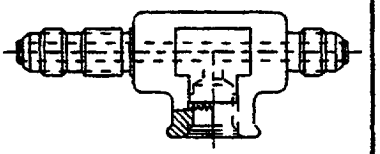 KC120 AS4311

PICTORIAL INDEX (cont)

TEE - PIPE THREAD ON RUN KC121 AS4312	TEE - PIPE THREAD ON LEG KC122 AS4313	TEE KC123 AS1252
UNION - BULKHEAD KC124 AS1100	REDUCER KC125 AS1368	UNION KC126 AS1251
TEE - BULKHEAD ON LEG KC127 AS1253	ELBOW - 45° BULKHEAD KC128 AS1249	ELBOW - 45° ADJ MALE END KC129 AS4314
PLUG KC130 AS1369	ELBOW - 90° SWIVEL END KC131 AS4315	ELBOW - 45° SWIVEL END KC132 AS4316
PLUGREDUCER - ADAPTER AND BOSS KC133 AS4317	ADAPTER - BULKHEAD AND BOSS KC134 AS4318	EXPANDER - ADAPTER; BOSS TO TUBE KC135 AS4319
FITTING END KC136 AS4320	FITTING END - SWIVEL FLARED TUBE KC137 AS4321	FITTING END - ADJUSTABLE KC138 AS4322

PICTORIAL INDEX (cont)

SWIVEL NUT KC139 AS4323	WASHER - FLARED TUBE FITTING 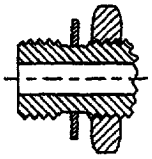 KC140 AS4324	CONICAL END 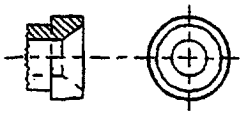 KC141 AS4325
NUT COUPLING 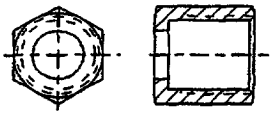 KC142 AS4326	SLEEVE - FLARED TUBE FITTING 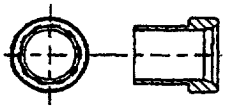 KC143 AS4327	REDUCER - BULKHEAD 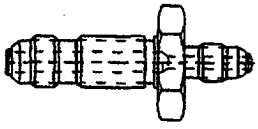 KC144 AS4328
SPUD, BUTTWELD 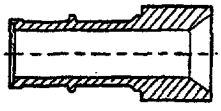 KC145	UNION, BUTTWELD 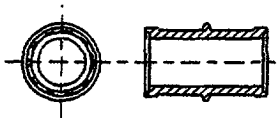 KC146	ELBOW - 90° BUTTWELD 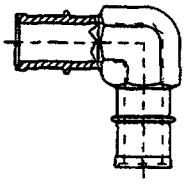 KC147
TEE - BUTTWELD 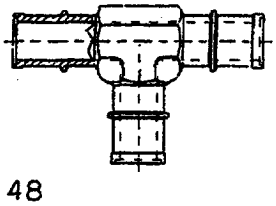 KC148	ELBOW - 45° BUTTWELD 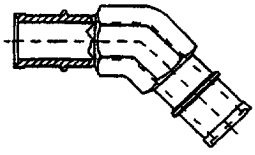 KC149	CAP ASSEMBLY 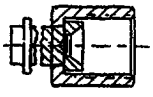 KC150 AS4329
SPUD - BUTTWELD TUBE REDUCER 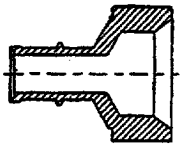 KC151	UNION - BUTTWELD REDUCER 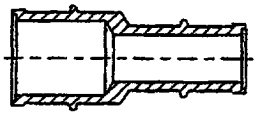 KC152	CROSS - BUTTWELD TUBE 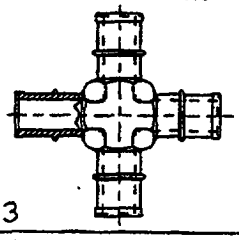 KC153
TUBING FLARED 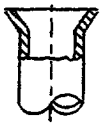 KC154 AS4330	CLAMP ASSEMBLY 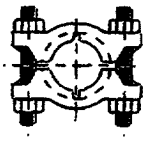 KC155	ELBOW - 90° PIPE HUB 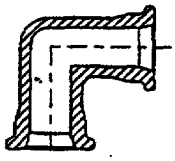 KC156

PICTORIAL INDEX (cont)

TEE - PIPE HUB 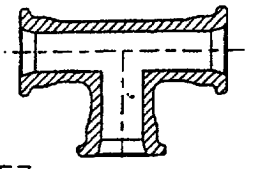 KC157	CROSS - PIPE HUB NOT TO BE USED FOR NEW DESIGN 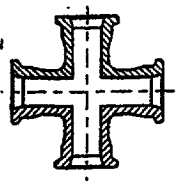 KC158	HUB - BUTTWELD PIPE 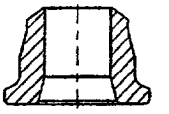 KC159
HUB - BLIND PIPE 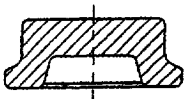 KC160	SEAL RING - PIPE HUB KC162	PIPE - CONNECTION ASSY. 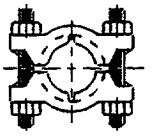 KC163
BUSHING REDUCER 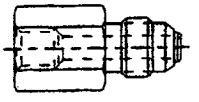 KC164 AS4340	HUB - TAPPED BLIND 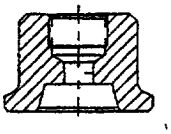 KC166	HUB - TAPPED 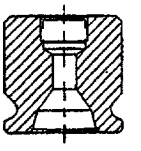 KC167
HUB - PRESSURE TAPPED 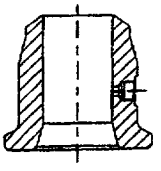 KC168	COUPLING ASSY. - BULKHEAD (SUPER PRESSURE) 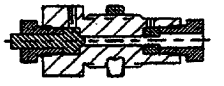 KC169	UNION, MALE - ADJ MALE END 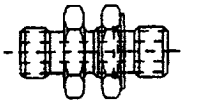 KC170 AS4346
UNION - DOUBLE FEMALE SWIVEL 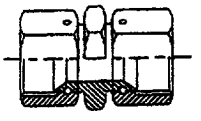 KC171 AS4347	ADAPTER, FEMALE BOSS TO SWIVEL 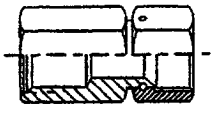 KC172 AS4348	COUPLING - TUBE 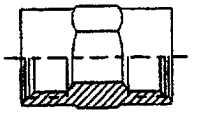 KC173 AS4349
PLUG - HEX HEAD 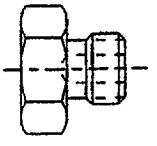 KC174 AS4350	ORIFICE, UNION 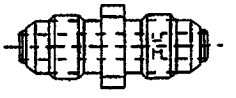 KC175	ORIFICE, UNION BULKHEAD 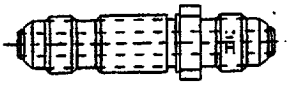 KC176

NUMERICAL INDEX

SAE Fitting Standard	KC Fitting Standard	Nomenclature	Page
AS1097, Rev. B	KC103, Rev. E	SEAL RING	2
AS1099, Rev. C	KC104, Rev. D	FITTING END, STANDARD DIMENSIONS FOR BULKHEAD FLARED TUBE CONNECTION FOR SEAL RING	3
AS1098, Rev. B	KC105, Rev. D	FITTING END, STANDARD DIMENSIONS FOR FLARED TUBE CONNECTION FOR SEAL RING	6
AS4301	KC106, Rev. E	REDUCER-ADAPTER, CONICAL END FITTING AND FLARED TUBE FOR SEAL RING	8
AS4302	KC107, Rev. E	TEE-ASSY, FLARED TUBE, FEMALE SWIVEL END ON RUN, FOR SEAL RING	10
AS4303	KC108, Rev. G	ELBOW ASSY, 90°, FLARED TUBE AND MALE ADJUSTABLE END, FOR SEAL RING	11
AS4304	KC109, Rev. E	TEE ASSY, FLARED TUBE, FEMALE SWIVEL END ON OUTLET, FOR SEAL RING	12
AS4305	KC110, Rev. G	TEE ASSY, FLARED TUBE, MALE ADJUSTABLE END ON RUN, FOR SEAL RING	13
AS4306	KC111, Rev. G	TEE ASSY, FLARED TUBE, MALE ADJUSTABLE END ON OUTLET, FOR SEAL RING	14
AS4307	KC112, Rev. E	ADAPTER, FLARED TUBE AND BOSS FOR SEAL RING	15
AS1366, Rev. A	KC113, Rev. F	ELBOW, FLARED TUBE BULKHEAD UNIVERSAL 90° FOR SEAL RING	16
AS1365, Rev. A	KC114, Rev. E	TEE, FLARED TUBE, BULKHEAD ON RUN, FOR SEAL RING	17
AS4308	KC115, Rev. E	BUSHING-SCREW THREAD EXPANDER FOR SEAL RING	18
AS4309	KC116, Rev. E	NIPPLE-FLARED TUBE AND PIPE THREAD FOR SEAL RING	20
AS1367, Rev. A	KC117, Rev. E	CROSS-FLARED TUBE FOR SEAL RING	22
AS1250, Rev. A	KC118, Rev. E	ELBOW-FLARED TUBE 90°, FOR SEAL RING	23
AS4310	KC119, Rev. E	TEE-FLARED TUBE, INTERNAL THREAD ON RUN FOR SEAL RING	24
AS4311	KC120, Rev. E	TEE-FLARED TUBE, INTERNAL THREAD ON SIDE, FOR SEAL RING	25
AS4312	KC121, Rev. E	TEE-FLARED TUBE WITH PIPE THREAD ON RUN, FOR SEAL RING	26
AS4313	KC122, Rev. D	TEE-FLARED TUBE, PIPE THREAD ON LEG	27

NUMERICAL INDEX (cont)

SAE Fitting Standard	KC Fitting Standard	Nomenclature	Page
AS1252, Rev. A	KC123, Rev. D	TEE FLARED TUBE FOR SEAL RING.....	28
AS1100	KC124, Rev G	UNION, FLARED TUBE, 3/8" BULKHEAD AND UNIVERSAL FOR SEAL RING	29
AS1368, Rev. A	KC125, Rev. F	REDUCER, EXTERNAL THREAD FLARED TUBE FOR SEAL RING.....	30
AS1251, Rev. B	KC126, Rev. D	UNION, FLARED TUBE FOR SEAL RING.	32
AS1253, Rev. B	KC127, Rev. E	TEE-FLARED TUBE AND BULKHEAD UNIVERSAL ON SIDE FOR SEAL RING....	33
AS1249, Rev. A	KC128, Rev. E	ELBOW-FLARED TUBE BULKHEAD UNIVERSAL 45°, FOR SEAL RING	34
AS4314	KC129, Rev. E	ELBOW ASSY, 45° FLARED TUBE AND MALE ADJUSTABLE END, FOR SEAL RING.....	35
AS1369, Rev. A	KC130, Rev. E	PLUG, FLARED TUBE FOR SEAL RING....	37
AS4315	KC131, Rev. F	ELBOW ASSY, 90° FLARED TUBE AND FEMALE SWIVEL END, FOR SEAL RING.	38
AS4316	KC132, Rev. D	ELBOW ASSY, 45° FLARED TUBE AND FEMALE SWIVEL END, FOR SEAL RING.	39
AS4317	KC133, Rev. E	REDUCER-ADAPTER FLARED TUBE TO BOSS FOR SEAL RING	40
AS4318	KC134, Rev. E	ADAPTER, FLARED TUBE, 3/8" BULKHEAD TO BOSS FOR SEAL RING	42
AS4319	KC135, Rev. E	EXPANDER-ADAPTER, FLARED TUBE TO BOSS, FOR SEAL RING.....	43
AS4320	KC136, Rev. F	STANDARD DIMENSIONS FOR FITTING END, STRAIGHT THREAD.....	45
AS4321	KC137, Rev. F	STANDARD DIMENSIONS FOR FITTING END, SWIVEL FLARED TUBE CONNECTION	46
AS4322	KC138, Rev. D	FITTING END, ADJUSTABLE, STANDARD DIMENSIONS FOR	47
AS4323	KC139, Rev. C	SWIVEL NUT, FLARED TUBE FITTING....	49
AS4324	KC140, Rev. G	WASHER, FLARED TUBE FITTING ADJUSTABLE END	51
AS4325	KC141, Rev. E	CONICAL END, STANDARD DIMENSIONS FOR.....	52
AS4326	KC142, Rev. D	NUT, COUPLING.....	53
AS4327	KC143, Rev. F	SLEEVE, FLARED TUBE FITTING.....	54
AS4328	KC144, Rev. F	REDUCER-FLARED TUBE, 3/8" BULKHEAD AND UNIVERSAL FOR SEAL RING.....	55

NUMERICAL INDEX (cont)

SAE Fitting Standard	KC Fitting Standard	Nomenclature	Page
	KC145	SPUD, BUTTWELD TUBE	58
	KC146	UNION, BUTTWELD TUBE	60
	KC147	ELBOW, 90° BUTTWELD TUBE	62
	KC148	TEE, BUTTWELD TUBE	64
	KC149, Rev. A	ELBOW, 45° BUTTWELD TUBE	66
AS4329	KC150, Rev. H	CAP, CAP ASSEMBLY PRESSURE SEAL FLARED TUBE FITTING	68
	KC151	SPUD, BUTTWELD TUBE REDUCER-ADAPTER	70
	KC152, Rev. A	UNION, BUTTWELD REDUCER	72
	KC153	CROSS, BUTTWELD TUBE	75
AS4330	KC154, Rev. D	TUBING, FLARED STANDARD DIMENSIONS FOR	78
	KC155, Rev. F	CLAMP ASSEMBLY	79
	KC156, Rev. E	ELBOW, 90° PIPE HUB	82
	KC157, Rev. E	TEE, PIPE HUB	84
	KC158, Rev. E	CROSS, PIPE HUB (NOT TO BE USED FOR NEW DESIGN)	86
	KC159, Rev. E	HUB, BUTTWELD	88
	KC160, Rev. E	HUB, BLIND PIPE	91
	KC161, Rev. B	DIMENSION TOLERANCES FOR HUB STYLE FLANGE FITTINGS	93
	KC162, Rev. F	RING, PIPE HUB SEAL	94
	KC163, Rev. C	PIPE CONNECTION ASSY, INSTALLATION OF	96
AS4340	KC164, Rev. F	BUSHING, SCREW THREAD REDUCER FOR SEAL RING	99
AS4341	KC165, Rev. E	WIRE, RETAINING SWIVEL NUT	100
	KC166, Rev. C	HUB, TAPPED BLIND	101
	KC167, Rev. C	HUB, TAPPED	103
	KC168, Rev. D	HUB, PRESSURE TAPPED	106
	KC169, Rev. A	COUPLING ASSEMBLY, BLKHD SUPER PRESSURE PORT	109
AS4346	KC170, Rev. B	UNION, ADJUSTABLE END	110
AS4347	KC171, Rev. A	UNION ASSEMBLY, DOUBLE SWIVEL NUT	111
AS4348	KC172, Rev. A	ADAPTER, SWIVEL NUT	112
AS4349	KC173, Rev. A	COUPLING, TUBE	113
AS4350	KC174, Rev. D	PLUG, HEX HEAD	114
	KC175, Rev. C	ORIFICE, UNION, FLARED TUBE FOR SEAL RING	115
	KC176, Rev. B	ORIFICE, UNION, BLKHD FLARED TUBE FOR SEAL RING	119

INTRODUCTION

1. PURPOSE

The purpose of this document is to establish uniform engineering practices and methods for fluid fittings and to:

a. Increase component interchangeability and reliability.

b. Simplify procurement, storage, inspections, and environmental limitations.

c. Expedite design by eliminating time spent on routine items for which design has already been accomplished.

2. SCOPE

This document is a compilation of standard fluid fitting parts and design standards used in the design of hydraulic and pneumatic systems used at the John F. Kennedy Space Center, Florida.

3. RECOGNITION

Standards originated for use at Kennedy Space Center are identified by a "KC" standard drawing number prefix. The coordination status for these standards is indicated at the lower left portion of the design standard sheet page. KC standards consist of both standard parts and design standards.

4. NONGOVERNMENTAL STANDARDS

Nongovernmental standards that are equivalent to KC standards are shown in this document as preferred standards for fluid fitting parts and design. These non-governmental standards are published by the Society of Automotive Engineers (SAE). Application for copies of these standards should be addressed to the Society of Automotive Engineers, Inc., 400 Commonwealth Drive, Warrendale, PA 15096.

The nongovernment standards shown in this document are interchangeable with "KC" fittings and are preferred for new design. "KC" fittings shall be utilized until existing stocks are depleted. New procurements of fluid fittings equivalent to "KC" fittings shall use the preferred nongovernmental standards.

NOTICE: WHEN GOVERNMENT DRAWINGS, SPECIFICATIONS OR OTHER DATA ARE USED FOR ANY PURPOSE OTHER THAN IN CONNECTION WITH A DEFINITELY RELATED GOVERNMENT PROCUREMENT OPERATION, THE UNITED STATES GOVERNMENT THEREBY INCURS NO RESPONSIBILITY NOR ANY OBLIGATION WHATSOEVER AND THE FACT THAT THE GOVERNMENT MAY HAVE FORMULATED, FURNISHED, OR IN ANY WAY SUPPLIED THE SAID DRAWINGS, SPECIFICATIONS, OR OTHER DATA IS NOT REGARDED BY IMPLICATION OR OTHERWISE AS IN ANY MANNER LICENSING THE HOLDER OR ANY OTHER PERSON OR CORPORATION, OR CONVEYING ANY RIGHTS OR PERMISSION TO MANUFACTURE, USE, OR SELL ANY PATENTED INVENTION THAT MAY IN ANY WAY BE RELATED THERETO.

FED SUP CLASS
5330

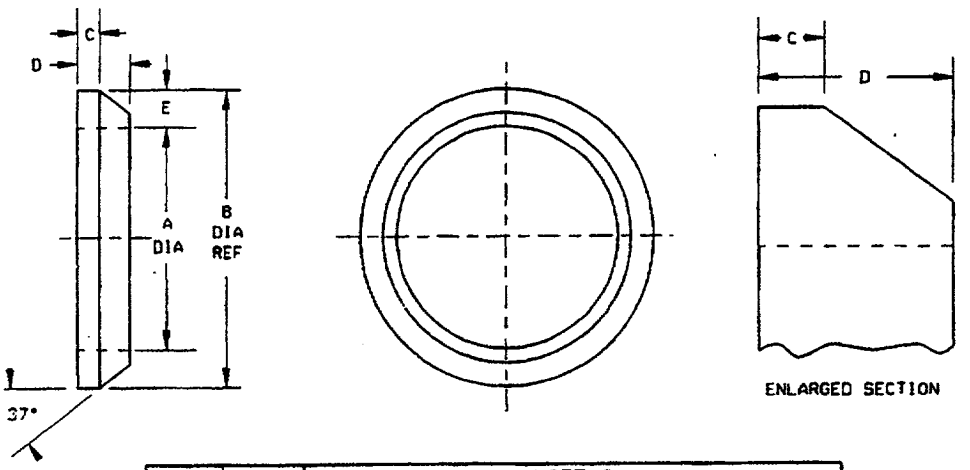

DASH NO.	TUBE OD REF	NOTE 2 A DIA.		B DIA. REF	C DIM. ±.0015	D DIM. +.003 -.001	E DIM. ±.001
-4	¼	.210	+.005 -.001	.251	.0364	.0523	.018
-6	⅜	.326		.391	.0335	.0673	.030
-8	½	.440		.505			
-10	⅝	.545	+.009 -.001	.610			
-12	¾	.670		.735			
-16	1	.953		1.018			
-20	1¼	1.180	+.013 -.001	1.261	.0256	.070	.038
-24	1½	1.430		1.511			
-28	1¾	1.660	+.022 -.001	1.765	.0319	.0890	.048
-32	2	1.910		2.015			

MATERIAL:----------TETRAFLUOROETHYLENE RESIN (TEFLON)
FINISH:----------
INSPECTION:----------
PACKAGING & MARKING:----------
} PER MIL-R-8791

NOTES:
1. DIMENSIONS ARE IN INCHES, TOLERANCES AS SPECIFIED, AND ANGLE ±1/2°.
2. DIMENSIONS ARE FREE STATE DIMENSIONS.
3. REFERENCED DOCUMENTS SHALL BE OF THE ISSUE IN EFFECT ON THE DATE OF INVITATION FOR BID.
4. THIS STANDARD TAKES PRECEDENCE OVER DOCUMENTS SPECIFIED HEREIN.

EXAMPLE OF PART NO. KC103-4 SEAL RING FOR -4 (¼") FITTING END

REVISED: (E) REV & REDRAWN 8-1-90
APPROVED: 5-18-65

CUSTODIAN:	JOHN F. KENNEDY SPACE CENTER	
PROCUREMENT SPEC. SEE NOTES	SEAL RING	STANDARD PART
COORDINATION STATUS		KC103
KSC DE		SHEET 1 OF 1

KSC FORM 32-85 (CG 4/92)

NOTICE: WHEN GOVERNMENT DRAWINGS, SPECIFICATIONS OR OTHER DATA ARE USED FOR ANY PURPOSE OTHER THAN IN CONNECTION WITH A DEFINITELY RELATED GOVERNMENT PROCUREMENT OPERATION, THE UNITED STATES GOVERNMENT THEREBY INCURS NO RESPONSIBILITY NOR ANY OBLIGATION WHATSOEVER AND THE FACT THAT THE GOVERNMENT MAY HAVE FORMULATED, FURNISHED, OR IN ANY WAY SUPPLIED THE SAID DRAWINGS, SPECIFICATIONS, OR OTHER DATA IS NOT REGARDED BY IMPLICATION OR OTHERWISE AS IN ANY MANNER LICENSING THE HOLDER OR ANY OTHER PERSON OR CORPORATION, OR CONVEYING ANY RIGHTS OR PERMISSION TO MANUFACTURE, USE, OR SELL ANY PATENTED INVENTION THAT MAY IN ANY WAY BE RELATED THERETO.

FED SUP CLASS
NONE

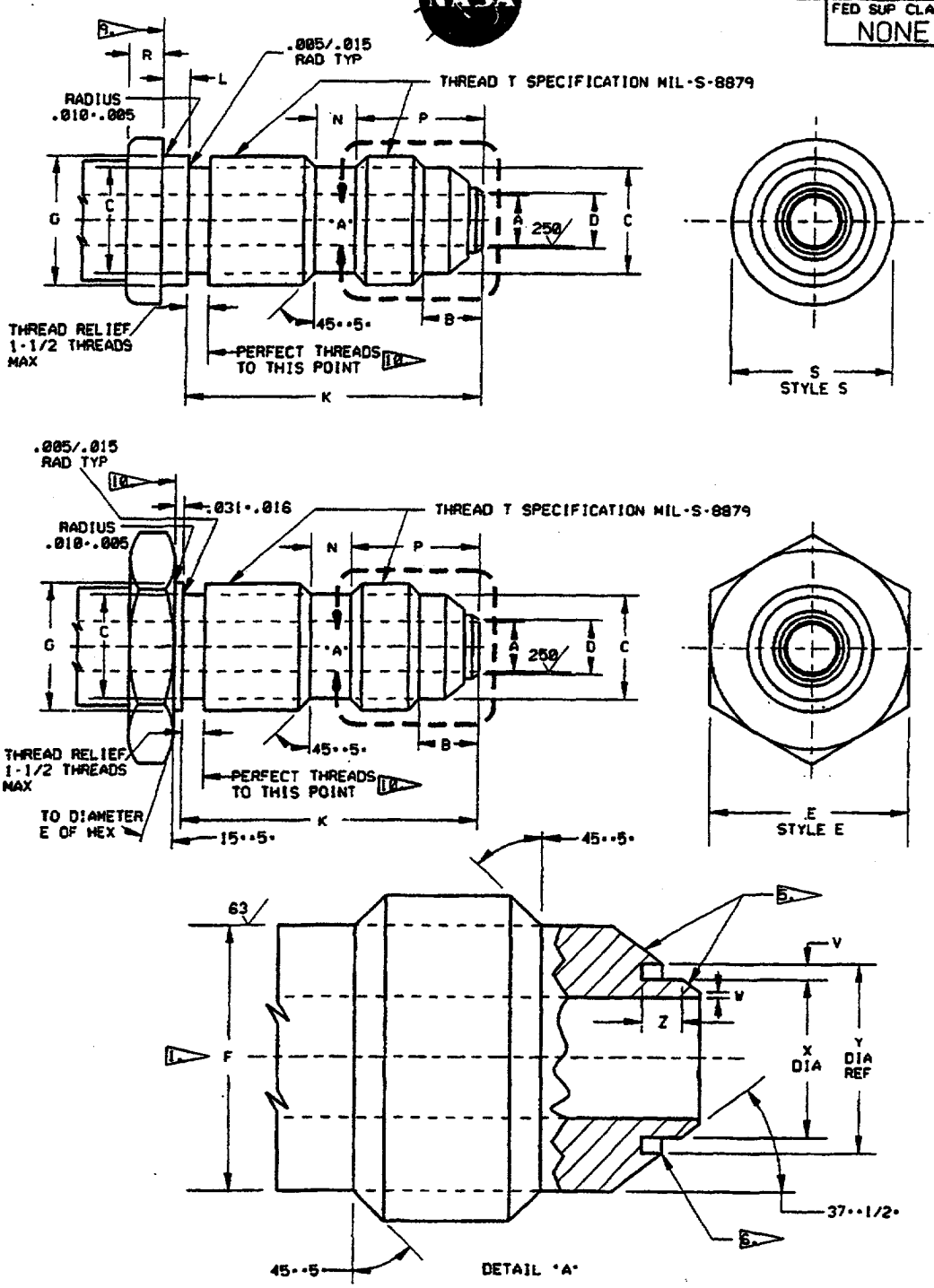

REVISED: (C) REV & REDRAWN 8-1-90 (D) REVISED & REDRAWN FOR FORMAT 9-1-97

APPROVED: 8-12-65

CUSTODIAN: JOHN F. KENNEDY SPACE CENTER		
PROCUREMENT SPEC. NONE	FITTING END, STANDARD DIMENSIONS FOR BULKHEAD FLARED TUBE CONNECTION FOR SEAL RING	DESIGN STANDARD
COORDINATION STATUS KSC DE		KC104
		SHEET 1 OF 3

KSC FORM 32-85 (CG 4/92)

NOTICE: WHEN GOVERNMENT DRAWINGS, SPECIFICATIONS OR OTHER DATA ARE USED FOR ANY PURPOSE OTHER THAN IN CONNECTION WITH A DEFINITELY RELATED GOVERNMENT PROCUREMENT OPERATION, THE UNITED STATES GOVERNMENT THEREBY INCURS NO RESPONSIBILITY NOR ANY OBLIGATION WHATSOEVER AND THE FACT THAT THE GOVERNMENT MAY HAVE FORMULATED, FURNISHED, OR IN ANY WAY SUPPLIED THE SAID DRAWINGS, SPECIFICATIONS, OR OTHER DATA IS NOT REGARDED BY IMPLICATION OR OTHERWISE AS IN ANY MANNER LICENSING THE HOLDER OR ANY OTHER PERSON OR CORPORATION, OR CONVEYING ANY RIGHTS OR PERMISSION TO MANUFACTURE, USE, OR SELL ANY PATENTED INVENTION THAT MAY IN ANY WAY BE RELATED THERETO.

FED SUP CLASS
NONE

DASH NO.	TUBE OD REF	THREAD T MIL-S-8879 (3)	A DIA		B +.000 -.045	C +.000 -.005 DIA (7) (8)	D +.003 DIA (7)	E		F +.002 -.003 (1) (7)	G MIN	G MAX
-4	¼	.4375-20-UNJF-3A	.172	+.003 -.004	.208	.359	.193	.688		.364	.429	.438
-6	⅜	.5625-18-UNJF-3A	.297		.213	.476	.318	.813		.481	.554	.562
-8	½	.7500-16-UNJF-3A	.391	+.004	.268	.654	.426	1.000	+.003 -.004	.660	.741	.750
-10	⅝	.8750-14-UNJF-3A	.484		.281	.767	.539	1.125		.773	.865	.875
-12	¾	1.0625-12-UNJ-3A	.609	+.005	.330	.938	.664	1.375		.945	1.051	1.062
-16	1	1.3125-12-UNJ-3A	.844	+.007 -.005		1.188	.913	1.625	+.016	1.195	1.301	1.312
-20	1¼	1.6250-12-UNJ-3A	1.078	+.008 -.005	.382	1.501	1.147	1.875		1.507	1.614	1.625
-24	1½	1.8750-12-UNJ-3A	1.312		.393	1.750	1.381	2.125		1.756	1.864	1.875
-28	1¾	2.2500-12-UNJ-3A	1.547	+.010 -.005	.466	2.125	1.646	2.500	+.020	2.131	2.239	2.250
-32	2	2.5000-12-UNJ-3A	1.781		.476	2.375	1.880	2.750		2.381	2.489	2.500

DASH NO.	TUBE OD REF	K +.000 -.045	L +.016	N +.010 -.000	P +.000 -.045	R +.016	S DIA +.016	V +.0015 -.0010	W MIN	X +.002 (7)	Y REF	Z +.001
-4	¼	1.026	.094	.140	.448	.125	.562	.020	.0075	.220	.261	.0533
-6	⅜	1.104		.156	.481	.141	.688		.007	.336	.401	
-8	½	1.260	.125	.187	.570	.156	.875		.014	.450	.515	
-10	⅝	1.401		.219	.628	.172	1.000	.032	.024	.560	.625	.0693
-12	¾	1.572		.234	.737	.188	1.188		.023	.685	.750	
-16	1						1.438		.029	.968	1.033	
-20	1¼	1.619			.789		1.750	.040		1.200	1.281	.071
-24	1½	1.635			.900		2.000			1.450	1.531	
-28	1¾	1.791			.873		2.375	.050	.044	1.690	1.790	.090
-32	2	1.916			.893		2.625			1.940	2.040	

REVISED: (D) REVISED & REDRAWN FOR FORMAT 9-1-97
REVISED: (C) REV & REDRAWN 8-1-90
APPROVED: 8-12-65

CUSTODIAN: JOHN F. KENNEDY SPACE CENTER

PROCUREMENT SPEC.
NONE

COORDINATION STATUS
KSC DE

FITTING END, STANDARD DIMENSIONS FOR BULKHEAD FLARED TUBE CONNECTION FOR SEAL RING

DESIGN STANDARD
KC104

SHEET 2 OF 3

KSC FORM 32-85 (CG 4/92)

FED SUP CLASS
NONE

NOTES:

1. GROOVE FORMED SHALL BE SMOOTH AND FREE OF ALL THREAD MARKS.
2. ON STYLE S FITTING END THE L DIMENSION PROVIDES FOR A WASHER TO FORM BACKING FACE AGAINST BULKHEAD AND A .031 INCH LAND FOR POSITIONING IN BULKHEAD. ON STYLE E FITTING END NO WASHER IS REQUIRED.
3. REMOVE ALL BURRS AND SLIVERS. BREAK SHARP EDGES UNLESS OTHERWISE NOTED.
4. DIMENSIONS IN INCHES UNLESS OTHERWISE SPECIFIED.
5. THIS SURFACE SHALL BE FREE OF BURRS. LONGITUDINAL AND SPIRAL TOOL MARKS AND SHALL BE SMOOTH. EXCEPT THAT ANNULAR TOOL MARKS WILL BE ALLOWED TO 64 MICROINCHES AA MAX.
6. LEAVE GROOVE CORNERS AND EDGES .005 MAXIMUM RADIUS. FINISH GROOVE TO 64 MICROINCHES AA MAX.
7. DIMENSIONS C. D. F. AND X SHALL BE CONCENTRIC WITH EACH OTHER AND WITH ALL ELEMENTS OF THE 37° ANGLE CONICAL SURFACE MEASURED AND CALCULATED AS INCLUDED ANGLES WITHIN .005 T.I.R.
8. T (THREAD PITCH DIA.) SHALL BE CONCENTRIC TO DIMENSION "C" WITHIN .015 T.I.R.
9. SQUARENESS BETWEEN THREAD PITCH DIAMETER AND FACE OF HEX ON STYLE E OR FACE OF SHOULDER ON STYLE S FITTING ENDS SHALL NOT EXCEED .005 FOR SIZES DASH 10 AND SMALLER OR .008 FOR LARGER SIZES. WHEN MEASURED AT THE OUTER DIAMETER OF THE FACE.
10. CHAMFER 45° ± 5° OPTIONAL.
11. ROUGHNESS OF MACHINED SURFACES SHALL BE 125AA MAXIMUM PER ANSI B46.1 UNLESS OTHERWISE SPECIFIED.

APPROVED: 8-12-65 REVISED: (C) REV & REDRAWN 8-1-90 (D) REVISED & REDRAWN FOR FORMAT 9-1-97

CUSTODIAN: JOHN F. KENNEDY SPACE CENTER		
PROCUREMENT SPEC. NONE	FITTING END, STANDARD DIMENSIONS FOR BULKHEAD FLARED TUBE CONNECTION FOR SEAL RING	DESIGN STANDARD
COORDINATION STATUS		KC104
KSC DE		SHEET 3 OF 3

KSC FORM 32-85 (CG 4/92)

NOTICE: WHEN GOVERNMENT DRAWINGS, SPECIFICATIONS OR OTHER DATA ARE USED FOR ANY PURPOSE OTHER THAN IN CONNECTION WITH A DEFINITELY RELATED GOVERNMENT PROCUREMENT OPERATION, THE UNITED STATES GOVERNMENT THEREBY INCURS NO RESPONSIBILITY NOR ANY OBLIGATION WHATSOEVER AND THE FACT THAT THE GOVERNMENT MAY HAVE FORMULATED, FURNISHED, OR IN ANY WAY SUPPLIED THE SAID DRAWINGS, SPECIFICATIONS, OR OTHER DATA IS NOT REGARDED BY IMPLICATION OR OTHERWISE AS IN ANY MANNER LICENSING THE HOLDER OR ANY OTHER PERSON OR CORPORATION, OR CONVEYING ANY RIGHTS OR PERMISSION TO MANUFACTURE, USE, OR SELL ANY PATENTED INVENTION THAT MAY IN ANY WAY BE RELATED THERETO.

NOTICE: WHEN GOVERNMENT DRAWINGS, SPECIFICATIONS OR OTHER DATA ARE USED FOR ANY PURPOSE OTHER THAN IN CONNECTION WITH A DEFINITELY RELATED GOVERNMENT PROCUREMENT OPERATION, THE UNITED STATES GOVERNMENT THEREBY INCURS NO RESPONSIBILITY NOR ANY OBLIGATION WHATSOEVER AND THE FACT THAT THE GOVERNMENT MAY HAVE FORMULATED, FURNISHED, OR IN ANY WAY SUPPLIED THE SAID DRAWINGS, SPECIFICATIONS, OR OTHER DATA IS NOT REGARDED BY IMPLICATION OR OTHERWISE AS IN ANY MANNER LICENSING THE HOLDER OR ANY OTHER PERSON OR CORPORATION, OR CONVEYING ANY RIGHTS OR PERMISSION TO MANUFACTURE, USE, OR SELL ANY PATENTED INVENTION THAT MAY IN ANY WAY BE RELATED THERETO.

FED SUP CLASS
NONE

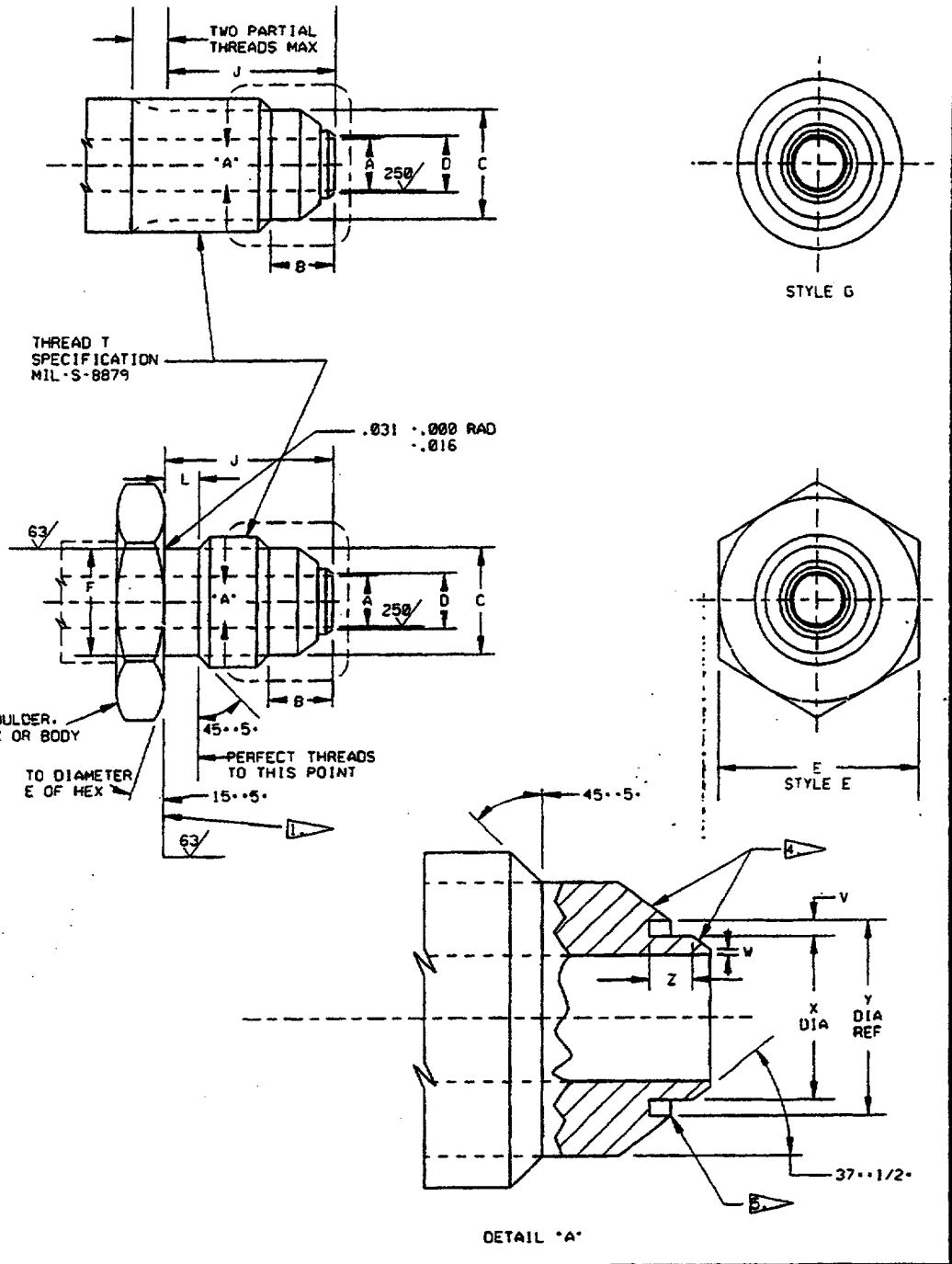

REVISED: (C) REVISED AND REDRAWN 8-1-90 (D) REVISED & REDRAWN FOR FORMAT 9-1-97

APPROVED: 5-10-65

CUSTODIAN: JOHN F. KENNEDY SPACE CENTER		
PROCUREMENT SPEC. NONE	FITTING END, STANDARD DIMENSIONS FOR FLARED TUBE CONNECTION FOR SEAL RING	DESIGN STANDARD KC105
COORDINATION STATUS KSC DE		SHEET 1 OF 2

KSC FORM 32-85 (CG 4/92)

NOTICE: WHEN GOVERNMENT DRAWINGS, SPECIFICATIONS OR OTHER DATA ARE USED FOR ANY PURPOSE OTHER THAN IN CONNECTION WITH A DEFINITELY RELATED GOVERNMENT PROCUREMENT OPERATION, THE UNITED STATES GOVERNMENT THEREBY INCURS NO RESPONSIBILITY NOR ANY OBLIGATION WHATSOEVER AND THE FACT THAT THE GOVERNMENT MAY HAVE FORMULATED, FURNISHED, OR IN ANY WAY SUPPLIED THE SAID DRAWINGS, SPECIFICATIONS, OR OTHER DATA IS NOT REGARDED BY IMPLICATION OR OTHERWISE AS IN ANY MANNER LICENSING THE HOLDER OR ANY OTHER PERSON OR CORPORATION, OR CONVEYING ANY RIGHTS OR PERMISSION TO MANUFACTURE, USE, OR SELL ANY PATENTED INVENTION THAT MAY IN ANY WAY BE RELATED THERETO.

DASH NO.	TUBE OD REF	THREAD T MIL-S-8879 7	A DIA		B +.000 -.045	C +.000 -.005 DIA 6 7	D +.003 DIA 5	E		F +.002 -.003 5	J +.000 -.045	L +.015 -.000	V +.0015 -.0010	W MIN	X +.002 5	Y REF	Z +.001
-4	¼	.4375-20-UNJF-3A	.172	+.003 -.004	.208	.359	.193	.688		.364	.565	.075	.020	.0075	.220	.261	.0533
-6	⅜	.5625-18-UNJF-3A	.297		.213	.476	.318	.813		.481	.571	.083		.007	.336	.401	
-8	½	.7500-16-UNJF-3A	.391	+.004	.268	.654	.426	1.000	+.003 -.004	.660	.672	.094		.014	.450	.515	
-10	⅝	.8750-14-UNJF-3A	.484		.281	.767	.539	1.125		.773	.773	.107	.032	.024	.560	.625	.0683
-12	¾	1.0625-12-UNJ-3A	.609	+.005	.330	.938	.664	1.375		.945	.879			.023	.685	.750	
-16	1	1.3125-12-UNJ-3A	.844	+.007 -.005		1.188	.913	1.625	+.016	1.195	.926			.029	.968	1.033	
-20	1¼	1.6250-12-UNJ-3A	1.078	+.008 -.005	.382	1.501	1.147	1.875		1.507	.973	.125	.040		1.200	1.281	.071
-24	1½	1.8750-12-UNJ-3A	1.312		.393	1.750	1.381	2.125		1.756	1.098				1.450	1.531	
-28	1¾	2.2500-12-UNJ-3A	1.547	+.010 -.005	.466	2.125	1.646	2.500	+.020	2.131	1.223		.050	.044	1.690	1.790	.090
-32	2	2.5000-12-UNJ-3A	1.781		.476	2.375	1.880	2.750		2.381	1.348				1.940	2.040	

NOTES:

1. SQUARENESS BETWEEN THREAD PITCH DIAMETER AND FACE OF HEX SHALL NOT EXCEED .005 FOR SIZES DASH 10 AND SMALLER OR .008 FOR LARGER SIZES. WHEN MEASURED AT THE OUTER DIAMETER OF THE FACE.
2. BREAK SHARP EDGES UNLESS OTHERWISE NOTED. REMOVE BURRS AND SLIVERS.
3. DIMENSIONS IN INCHES, UNLESS OTHERWISE SPECIFIED.
4. THIS SURFACE SHALL BE FREE OF BURRS. LONGITUDINAL AND SPIRAL TOOL MARKS AND SHALL BE SMOOTH EXCEPT THAT ANNULAR TOOL MARKS WILL BE ALLOWED TO 64 MICROINCHES AA MAX.
5. LEAVE GROOVE CORNERS AND EDGES .005 MAX RADIUS. FINISH GROOVE TO 64 MICROINCHES AA MAX.
6. DIMENSIONS C, D, F, AND X SHALL BE CONCENTRIC WITH EACH OTHER AND WITH ALL ELEMENTS OF THE 37° ANGLE CONICAL SURFACE MEASURED AND CALCULATED AS INCLUDED ANGLES WITHIN .005 T.I.R.
7. T (THREAD PITCH DIA.) SHALL BE CONCENTRIC TO DIMENSION 'C' WITHIN .015 T.I.R.
8. ROUGHNESS OF MACHINED SURFACES SHALL BE 125AA MAXIMUM PER ANSI B46.1 UNLESS OTHERWISE SPECIFIED.

APPROVED: 5-10-65

REVISED: (C) REVISED AND REDRAWN 8-1-90 (D) REVISED & REDRAWN FOR FORMAT 9-1-97

FED SUP CLASS NONE

CUSTODIAN: JOHN F. KENNEDY SPACE CENTER

PROCUREMENT SPEC. NONE

COORDINATION STATUS KSC DE

FITTING END, STANDARD DIMENSIONS FOR FLARED TUBE CONNECTION FOR SEAL RING

DESIGN STANDARD KC105

SHEET 2 OF 2

KSC FORM 32-85 (CC 4/92)

GP-425

FED SUP CLASS
4730

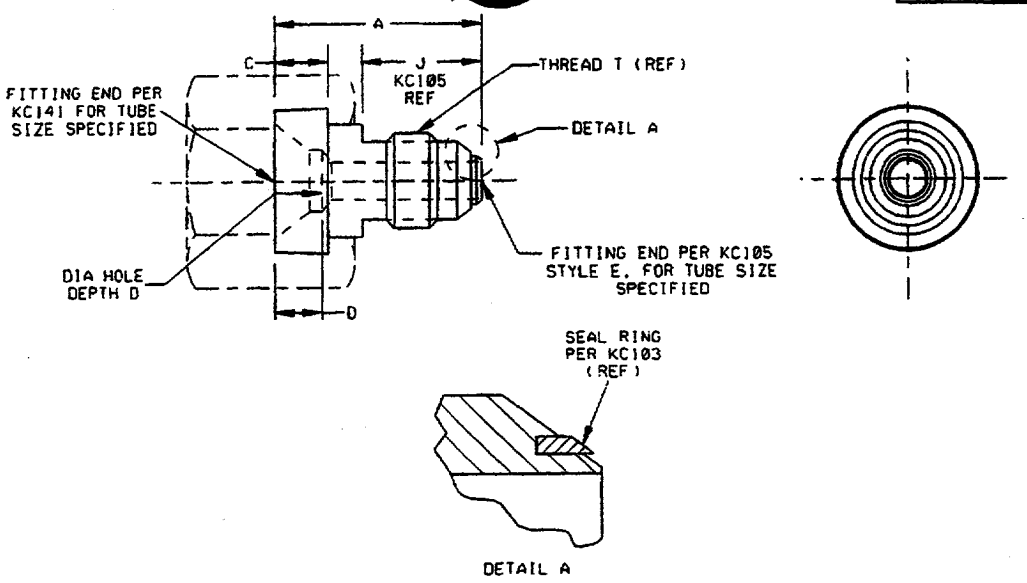

DASH NO.		CONICAL END MATES WITH FITTING FOR	TUBE END		A +.000 -.075	C REF	D REF
CRE STEEL	AL ALLOY	TUBE OD	TUBE OD	THREAD T REF			
K6-4	D6-4	3/8	1/4	7/16-20	.974	.172	.219
K8-4	D8-4	1/2			1.005	.219	.313
K8-6	D8-6		3/8	9/16-18			
K10-6	D10-6	5/8			1.036	.234	.281
K12-4	D12-4	3/4	1/4	7/16-20	1.099	.266	.313
K12-6	D12-6		3/8	9/16-18			
K12-8	D12-8		1/2	3/4-16	1.193		
K16-8	D16-8	1			1.271	.281	.344
K16-12	D16-12		3/4	1-1/16-12	1.474		
K20-8	D20-8	1-1/4	1/2	3/4-16	1.411	.313	.438
K20-12	D20-12		3/4	1-1/16-12	1.536		.375
K20-16	D20-16		1	1-5/16-12	1.599		.438
K24-12	D24-12	1-1/2	3/4	1-1/16-12	1.630	.344	.406
K24-16	D24-16		1	1-5/16-12			
K24-20	D24-20		1-1/4	1-5/8-12	1.693		.500
K32-16	D32-16	2	1	1-5/16-12	2.036	.406	.625
K32-20	D32-20		1-1/4	1-5/8-12	1.786		.469
K32-24	D32-24		1-1/2	1-7/8-12	1.911		.531

REVISED: (E) REVISED AND REDRAWN 8-1-90

APPROVED: 5-10-65

CUSTODIAN: JOHN F. KENNEDY SPACE CENTER

PROCUREMENT SPEC. KSC-F-124

COORDINATION STATUS KSC DE

REDUCER-ADAPTER, CONICAL END FITTING AND FLARED TUBE FOR SEAL RING

STANDARD PART

KC106

SHEET 1 OF 2

KSC FORM 32-85 (CG 4/92)

NOTICE: WHEN GOVERNMENT DRAWINGS, SPECIFICATIONS OR OTHER DATA ARE USED FOR ANY PURPOSE OTHER THAN IN CONNECTION WITH A DEFINITELY RELATED GOVERNMENT PROCUREMENT OPERATION, THE UNITED STATES GOVERNMENT THEREBY INCURS NO RESPONSIBILITY NOR ANY OBLIGATION WHATSOEVER AND THE FACT THAT THE GOVERNMENT MAY HAVE FORMULATED, FURNISHED, OR IN ANY WAY SUPPLIED THE SAID DRAWINGS, SPECIFICATIONS, OR OTHER DATA IS NOT REGARDED BY IMPLICATION OR OTHERWISE AS IN ANY MANNER LICENSING THE HOLDER OR ANY OTHER PERSON OR CORPORATION, OR CONVEYING ANY RIGHTS OR PERMISSION TO MANUFACTURE, USE, OR SELL ANY PATENTED INVENTION THAT MAY IN ANY WAY BE RELATED THERETO.

FED SUP CLASS
4730

MATERIAL:	SEE PROCUREMENT SPECIFICATION; ALUMINUM ALLOY, 2024-T6, CODE "D"; CORROSION RESISTANT STEEL (CLASS 316), CODE "K" (WAS CODE "C")
FINISH:	SEE PROCUREMENT SPECIFICATION
SCREW THREAD:	SEE PROCUREMENT SPECIFICATION.

NOTES:

1. REMOVE BURRS AND SLIVERS. BREAK SHARP EDGES UNLESS OTHERWISE NOTED.
2. DIMENSIONS IN INCHES UNLESS OTHERWISE SPECIFIED.
3. FOR DESIGN FEATURE PURPOSES, THIS DRAWING TAKES PRECEDENCE OVER PROCUREMENT DOCUMENTS REFERENCED HEREIN.
4. REFERENCED DOCUMENTS SHALL BE OF THE ISSUE IN EFFECT ON THE DATE OF INVITATION FOR BID.
5. MARKING OF FITTINGS SHALL BE CONSISTANT WITH PROCUREMENT SPECIFICATION USING APPLICABLE KC STANDARD AND PART NUMBER DESIGNATIONS AS SHOWN ON THIS DRAWING.

EXAMPLE OF PART NOS.

KC106K8-6 = REDUCER-ADAPTER - FOR ½ OD TUBE CONICAL FITTING END TO ⅜ OD TUBE, CORROSION RESISTANT STEEL

KC106D12-4 = REDUCER-ADAPTER - FOR ¾ OD TUBE CONICAL FITTING END TO ¼ OD TUBE, ALUMINUM ALLOY

APPROVED: 5-10-65 REVISED: (E) REVISED AND REDRAWN 8-1-90

CUSTODIAN: JOHN F. KENNEDY SPACE CENTER		
PROCUREMENT SPEC. KSC-F-124	REDUCER-ADAPTER, CONICAL END FITTING AND FLARED TUBE FOR SEAL RING	STANDARD PART
COORDINATION STATUS KSC DE		KC106
		SHEET 2 OF 2

KSC FORM 32-85 (CG 4/92)

NOTICE: WHEN GOVERNMENT DRAWINGS, SPECIFICATIONS OR OTHER DATA ARE USED FOR ANY PURPOSE OTHER THAN IN CONNECTION WITH A DEFINITELY RELATED GOVERNMENT PROCUREMENT OPERATION, THE UNITED STATES GOVERNMENT THEREBY INCURS NO RESPONSIBILITY NOR ANY OBLIGATION WHATSOEVER AND THE FACT THAT THE GOVERNMENT MAY HAVE FORMULATED, FURNISHED, OR IN ANY WAY SUPPLIED THE SAID DRAWINGS, SPECIFICATIONS, OR OTHER DATA IS NOT REGARDED BY IMPLICATION OR OTHERWISE AS IN ANY MANNER LICENSING THE HOLDER OR ANY OTHER PERSON OR CORPORATION, OR CONVEYING ANY RIGHTS OR PERMISSION TO MANUFACTURE, USE, OR SELL ANY PATENTED INVENTION THAT MAY IN ANY WAY BE RELATED THERETO.

NOTICE: WHEN GOVERNMENT DRAWINGS, SPECIFICATIONS OR OTHER DATA ARE USED FOR ANY PURPOSE OTHER THAN IN CONNECTION WITH A DEFINITELY RELATED GOVERNMENT PROCUREMENT OPERATION, THE UNITED STATES GOVERNMENT THEREBY INCURS NO RESPONSIBILITY NOR ANY OBLIGATION WHATSOEVER AND THE FACT THAT THE GOVERNMENT MAY HAVE FORMULATED, FURNISHED, OR IN ANY WAY SUPPLIED THE SAID DRAWINGS, SPECIFICATIONS, OR OTHER DATA IS NOT REGARDED BY IMPLICATION OR OTHERWISE AS IN ANY MANNER LICENSING THE HOLDER OR ANY OTHER PERSON OR CORPORATION, OR CONVEYING ANY RIGHTS OR PERMISSION TO MANUFACTURE, USE, OR SELL ANY PATENTED INVENTION THAT MAY IN ANY WAY BE RELATED THERETO.

FED SUP CLASS 4730

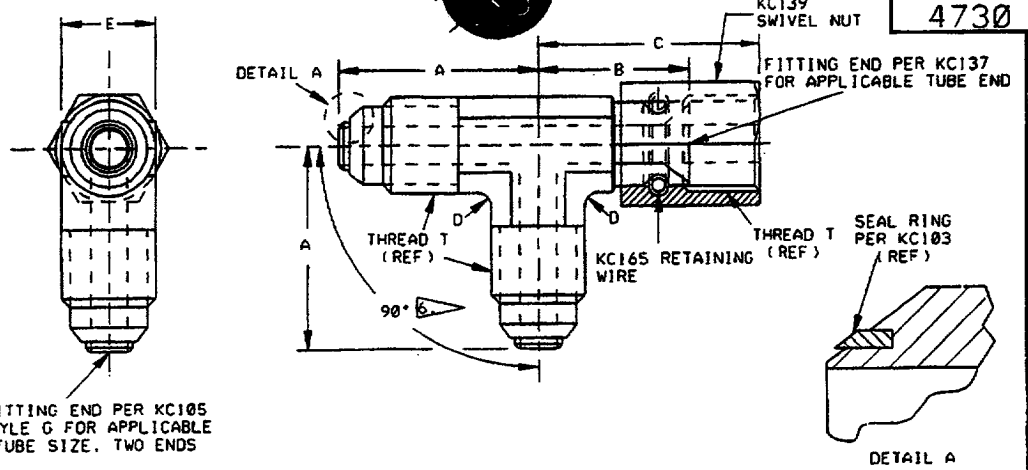

DASH NO. CRE STEEL	DASH NO. AL ALLOY	TUBE OD REF	THREAD T REF	A DIM. +.000 -.063	B DIM +.000 -.063	C DIM REF	D RAD ±.03	E PAD DIM.	SWIVEL NUT KC139 CRE STEEL	SWIVEL NUT KC139 AL ALLOY	RETAINING WIRE
K4	D4	¼	7/16-20	.906	.704	1.000	.063	.438	K4	D4	KC165-4
K6	D6	⅜	9/16-18	1.078	.891	1.250	.094	.563	K6	D6	KC165-6
K8	D8	½	3/4-16	1.266	.969	1.375		.750	K8	D8	KC165-8
K10	D10	⅝	7/8-14	1.469	1.141	1.625		.875	K10	D10	KC165-10
K12	D12	¾	1-1/16-12	1.672	1.204	1.750		1.063	K12	D12	KC165-12
K16	D16	1	1-5/16-12	1.828	1.422	2.000	.125	1.313	K16	D16	KC165-16
K20	D20	1¼	1-5/8-12	2.078	1.704	2.313		1.625	K20	D20	KC165-20
K24	D24	1½	1-7/8-12	2.344	1.875	2.594	.188	1.875	K24	D24	KC165-24
K28	D28	1¾	2-1/4-12	2.828	2.063	2.900		2.250	K28	D28	KC165-28
K32	D32	2	2-1/2-12	3.078	2.454	3.375	.250	2.500	K32	D32	KC165-32

MATERIAL: SEE PROCUREMENT SPECIFICATION, ALUMINUM ALLOY, 2014-T6, CODE "D" CORROSION RESISTANT STEEL (CLASS 316), CODE "K" (WAS CODE "C")

FINISH: SEE PROCUREMENT SPECIFICATION.

SCREW THREAD: SEE PROCUREMENT SPECIFICATION.

NOTES:
1. REMOVE BURRS AND SLIVERS. BREAK SHARP EDGES UNLESS OTHERWISE NOTED.
2. DIMENSIONS IN INCHES. UNLESS OTHERWISE SPECIFIED, TOLERANCE DECIMALS ±.016.
3. FOR DESIGN FEATURE PURPOSES, THIS DRAWING TAKES PRECEDENCE OVER PROCUREMENT DOCUMENTS REFERENCED HEREIN.
4. REFERENCED DOCUMENTS SHALL BE OF THE ISSUE IN EFFECT ON THE DATE OF INVITATION FOR BID.
5. MARKING OF FITTINGS SHALL BE CONSISTENT WITH PROCUREMENT SPECIFICATION USING APPLICABLE KC STANDARD AND PART NUMBER DESIGNATIONS AS SHOWN ON THIS DRAWING.

6 TOLERANCE UP TO AND INCLUDING -6 SIZE ±2-1/2° ABOVE -6 SIZE ±1-1/2°.

EXAMPLE OF PART NOS.
KC107K8 = TEE WITH SWIVEL END ON RUN, ½" OD TUBING, CORROSION RESISTANT STEEL
KC107D12 = TEE WITH SWIVEL END ON RUN, ¾" OD TUBING, ALUMINUM ALLOY

APPROVED: 5-10-65 REVISED: (E) REV & REDRAWN 8-1-90

CUSTODIAN: JOHN F. KENNEDY SPACE CENTER

PROCUREMENT SPEC. KSC-F-124

COORDINATION STATUS KSC DE

TEE-ASSY, FLARED TUBE FEMALE SWIVEL END ON RUN, FOR SEAL RING

STANDARD PART KC107

SHEET 1 OF 1

KSC FORM 32-85 (CG 4/92)

FED SUP CLASS
4730

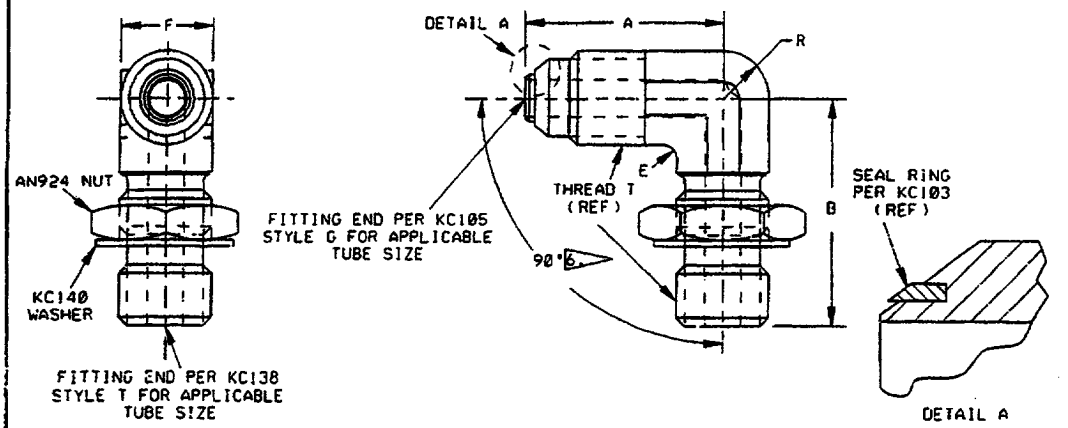

DASH NO. CRE STEEL	DASH NO. AL ALLOY	TUBE OD REF	THREAD T REF	A DIM. +.000 -.063	B DIM. +.000 -.063	E RAD +.03 -.03	R RAD +.03 -.03	F PAD DIM. +.016 -.016	BULKHEAD NUT FOR CRE STEEL ASSY *	BULKHEAD NUT FOR AL ALLOY ASSY	WASHER FOR CRE STEEL ASSY	WASHER FOR AL ALLOY ASSY
K4	D4	¼	7/16-20	.906	1.063	.063	.242	.438	AN924-K4	AN924-D4	KC140C4	KC140D4
K6	D6	⅜	9/16-18	1.078	1.281	.094	.317	.563	AN924-K6	AN924-D6	KC140C6	KC140D6
K8	D8	½	3/4-16	1.266	1.485		.414	.750	AN924-K8	AN924-D8	KC140C8	KC140D8
K10	D10	⅝	7/8-14	1.469	1.735	.125	.484	.875	AN924-K10	AN924-D10	KC140C10	KC140D10
K12	D12	¾	1-1/16-12	1.672	1.969		.586	1.063	AN924-K12	AN924-D12	KC140C12	KC140D12
K16	D16	1	1-5/16-12	1.828	2.078		.719	1.313	AN924-K16	AN924-D16	KC140C16	KC140D16
K20	D20	1¼	1-5/8-12	2.078	2.281		.875	1.625	AN924-K20	AN924-D20	KC140C20	KC140D20
K24	D24	1½	1-7/8-12	2.344	2.422		1.031	1.875	AN924-K24	AN924-D24	KC140C24	KC140D24
K28	D28	1¾	2-1/4-12	2.828	2.813		1.125	2.250	AN924-K28	AN924-D28	KC140C28	KC140D28
K32	D32	2	2-1/2-12	3.078	2.922	.188	1.383	2.500	AN924-K32	AN924-D32	KC140C32	KC140D32

MATERIAL: SEE PROCUREMENT SPECIFICATION.
ALUMINUM ALLOY, 2014-T6, CODE "D"
CORROSION RESISTANT STEEL (CLASS 316), CODE "K" (WAS CODE "C")
*AN924 CRES NUTS MAY BE EITHER 304, CODE "J" OR 316, CODE "K".

FINISH: SEE PROCUREMENT SPECIFICATION.

SCREW THREAD: SEE PROCUREMENT SPECIFICATION.

NOTES:
1. REMOVE BURRS AND SLIVERS. BREAK SHARP EDGES UNLESS OTHERWISE NOTED.
2. DIMENSIONS IN INCHES. UNLESS OTHERWISE SPECIFIED, TOLERANCE DECIMALS ±.016.
3. FOR DESIGN FEATURE PURPOSES, THIS DRAWING TAKES PRECEDENCE OVER PROCUREMENT DOCUMENTS REFERENCED HEREIN.
4. REFERENCED DOCUMENTS SHALL BE OF THE ISSUE IN EFFECT ON THE DATE OF INVITATION FOR BID.
5. MARKING OF FITTINGS SHALL BE CONSISTENT WITH PROCUREMENT SPECIFICATION USING APPLICABLE KC STANDARD AND PART NUMBER DESIGNATIONS AS SHOWN ON THIS DRAWING.

6 TOLERANCE UP TO AND INCLUDING -6 SIZE ±2-1/2° ABOVE -6 SIZE ±1-1/2°.

EXAMPLE OF PART NOS.
KC108K8 = ELBOW, ½" OD TUBING, CORROSION RESISTANT STEEL
KC108D12 = ELBOW, ¾" OD TUBING, ALUMINUM ALLOY

REVISED: (G) REV & REDRAWN 8-1-98

APPROVED: 5-10-65

CUSTODIAN: JOHN F. KENNEDY SPACE CENTER

PROCUREMENT SPEC. KSC-F-124

COORDINATION STATUS KSC DE

ELBOW ASSY, 90°, FLARED TUBE & MALE ADJUSTABLE END, FOR SEAL RING

STANDARD PART

KC108

SHEET 1 OF 1

KSC FORM 32-85 (CG 4/92)

NOTICE: WHEN GOVERNMENT DRAWINGS, SPECIFICATIONS OR OTHER DATA ARE USED FOR ANY PURPOSE OTHER THAN IN CONNECTION WITH A DEFINITELY RELATED GOVERNMENT PROCUREMENT OPERATION, THE UNITED STATES GOVERNMENT THEREBY INCURS NO RESPONSIBILITY NOR ANY OBLIGATION WHATSOEVER AND THE FACT THAT THE GOVERNMENT MAY HAVE FORMULATED, FURNISHED, OR IN ANY WAY SUPPLIED THE SAID DRAWINGS, SPECIFICATIONS, OR OTHER DATA IS NOT REGARDED BY IMPLICATION OR OTHERWISE AS IN ANY MANNER LICENSING THE HOLDER OR ANY OTHER PERSON OR CORPORATION, OR CONVEYING ANY RIGHTS OR PERMISSION TO MANUFACTURE, USE, OR SELL ANY PATENTED INVENTION THAT MAY IN ANY WAY BE RELATED THERETO.

FED SUP CLASS 4730

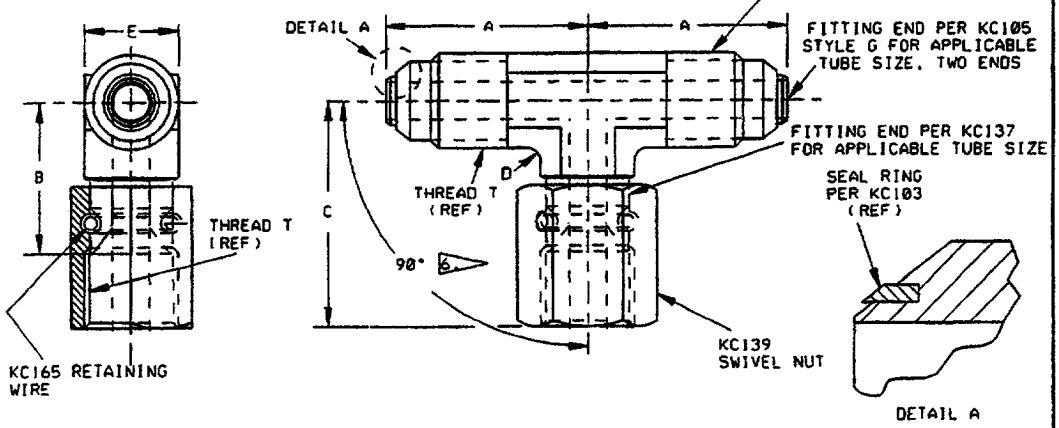

DASH NO. CRE STEEL	DASH NO. AL ALLOY	TUBE OD REF	THREAD T REF	A DIM. +.000 -.063	B DIM +.000 -.031	C DIM REF	D RAD ±.03	E PAD DIM.	SWIVEL NUT KC139 CRE STEEL	SWIVEL NUT KC139 AL ALLOY	RETAINING WIRE
K4	D4	¼	7/16-20	.906	.704	1.000	.063	.438	K4	D4	KC165-4
K6	D6	⅜	9/16-18	1.078	.891	1.250	.094	.563	K6	D6	KC165-6
K8	D8	½	3/4-16	1.266	.969	1.375		.750	K8	D8	KC165-8
K10	D10	⅝	7/8-14	1.469	1.141	1.625		.875	K10	D10	KC165-10
K12	D12	¾	1-1/16-12	1.672	1.204	1.750		1.063	K12	D12	KC165-12
K16	D16	1	1-5/16-12	1.828	1.422	2.000	.125	1.313	K16	D16	KC165-16
K20	D20	1¼	1-5/8-12	2.078	1.704	2.313		1.625	K20	D20	KC165-20
K24	D24	1½	1-7/8-12	2.344	1.875	2.594	.188	1.875	K24	D24	KC165-24
K28	D28	1¾	2-1/4-12	2.828	2.063	2.900		2.250	K28	D28	KC165-28
K32	D32	2	2-1/2-12	3.078	2.454	3.375	.250	2.500	K32	D32	KC165-32

MATERIAL: SEE PROCUREMENT SPECIFICATION.
ALUMINUM ALLOY, 2014-T6, CODE "D"
CORROSION RESISTANT STEEL (CLASS 316), CODE "K" (WAS CODE "C")

FINISH: SEE PROCUREMENT SPECIFICATION.

SCREW THREAD: SEE PROCUREMENT SPECIFICATION.

NOTES:
1. REMOVE BURRS AND SLIVERS. BREAK SHARP EDGES UNLESS OTHERWISE NOTED.
2. DIMENSIONS IN INCHES. UNLESS OTHERWISE SPECIFIED, TOLERANCE DECIMALS ±.016.
3. FOR DESIGN FEATURE PURPOSES. THIS DRAWING TAKES PRECEDENCE OVER PROCUREMENT DOCUMENTS REFERENCED HEREIN.
4. REFERENCED DOCUMENTS SHALL BE OF THE ISSUE IN EFFECT ON THE DATE OF INVITATION FOR BID.
5. MARKING OF FITTINGS SHALL BE CONSISTENT WITH PROCUREMENT SPECIFICATION USING APPLICABLE KC STANDARD AND PART NUMBER DESIGNATIONS AS SHOWN ON THIS DRAWING.

6 TOLERANCE UP TO AND INCLUDING -6 SIZE ±2-1/2° ABOVE -6 SIZE ±1-1/2°.

EXAMPLE OF PART NOS.
KC109K8 = TEE WITH SWIVEL END ON OUTLET, ½" OD TUBING, CORROSION RESISTANT STEEL
KC109D12 = TEE WITH SWIVEL END ON OUTLET, ¾" OD TUBING, ALUMINUM ALLOY

REVISED: (E) REV & REDRAWN 8-1-90
APPROVED: 5-10-65

CUSTODIAN: JOHN F. KENNEDY SPACE CENTER

PROCUREMENT SPEC. KSC-F-124

COORDINATION STATUS KSC DE

TEE ASSY, FLARED TUBE, FEMALE SWIVEL END ON OUTLET, FOR SEAL RING

STANDARD PART

KC109

SHEET 1 OF 1

KSC FORM 32-85 (CG 4/92)

NOTICE: WHEN GOVERNMENT DRAWINGS, SPECIFICATIONS OR OTHER DATA ARE USED FOR ANY PURPOSE OTHER THAN IN CONNECTION WITH A DEFINITELY RELATED GOVERNMENT PROCUREMENT OPERATION, THE UNITED STATES GOVERNMENT THEREBY INCURS NO RESPONSIBILITY NOR ANY OBLIGATION WHATSOEVER AND THE FACT THAT THE GOVERNMENT MAY HAVE FORMULATED, FURNISHED, OR IN ANY WAY SUPPLIED THE SAID DRAWINGS, SPECIFICATIONS, OR OTHER DATA IS NOT REGARDED BY IMPLICATION OR OTHERWISE AS IN ANY MANNER LICENSING THE HOLDER OR ANY OTHER PERSON OR CORPORATION, OR CONVEYING ANY RIGHTS OR PERMISSION TO MANUFACTURE, USE, OR SELL ANY PATENTED INVENTION THAT MAY IN ANY WAY BE RELATED THERETO.

FED SUP CLASS
4730

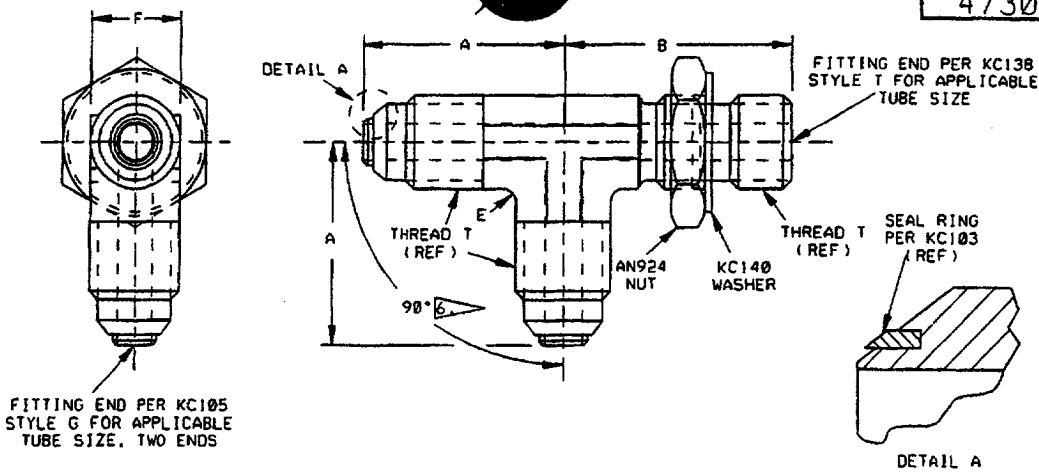

DASH NO. CRE STEEL	DASH NO. AL ALLOY	TUBE OD REF	THREAD T REF	A DIM. +.000 -.063	B DIM. +.000 -.063	E RAD +.03 -.03	F PAD DIM. +.016 -.016	BULKHEAD NUT FOR CRE STEEL ASSY *	BULKHEAD NUT FOR AL ALLOY ASSY	WASHER FOR CRE STEEL ASSY	WASHER FOR AL ALLOY ASSY
K4	D4	¼	7/16-20	.906	1.063	.063	.438	AN924-K4	AN924-D4	KC140C4	KC140D4
K6	D6	⅜	9/16-18	1.078	1.281	.094	.563	AN924-K6	AN924-D6	KC140C6	KC140D6
K8	D8	½	3/4-16	1.266	1.485		.750	AN924-K8	AN924-D8	KC140C8	KC140D8
K10	D10	⅝	7/8-14	1.469	1.735	.125	.875	AN924-K10	AN924-D10	KC140C10	KC140D10
K12	D12	¾	1-1/16-12	1.672	1.969		1.063	AN924-K12	AN924-D12	KC140C12	KC140D12
K16	D16	1	1-5/16-12	1.828	2.078		1.313	AN924-K16	AN924-D16	KC140C16	KC140D16
K20	D20	1¼	1-5/8-12	2.078	2.281		1.625	AN924-K20	AN924-D20	KC140C20	KC140D20
K24	D24	1½	1-7/8-12	2.344	2.422		1.875	AN924-K24	AN924-D24	KC140C24	KC140D24
K28	D28	1¾	2-1/4-12	2.828	2.813		2.250	AN924-K28	AN924-D28	KC140C28	KC140D28
K32	D32	2	2-1/2-12	3.078	2.922	.188	2.500	AN924-K32	AN924-D32	KC140C32	KC140D32

MATERIAL: SEE PROCUREMENT SPECIFICATION.
ALUMINUM ALLOY, 2014-T6, CODE "D"
CORROSION RESISTANT STEEL (CLASS 316), CODE "K" (WAS CODE "C")
*AN924 CRES NUTS MAY BE EITHER 304, CODE "J" OR 316, CODE "K".

FINISH: SEE PROCUREMENT SPECIFICATION.

SCREW THREAD: SEE PROCUREMENT SPECIFICATION.

NOTES:
1. REMOVE BURRS AND SLIVERS. BREAK SHARP EDGES UNLESS OTHERWISE NOTED.
2. DIMENSIONS IN INCHES. UNLESS OTHERWISE SPECIFIED, TOLERANCE DECIMALS ±.016.
3. FOR DESIGN FEATURE PURPOSES, THIS DRAWING TAKES PRECEDENCE OVER PROCUREMENT DOCUMENTS REFERENCED HEREIN.
4. REFERENCED DOCUMENTS SHALL BE OF THE ISSUE IN EFFECT ON THE DATE OF INVITATION FOR BID.
5. MARKING OF FITTINGS SHALL BE CONSISTENT WITH PROCUREMENT SPECIFICATION USING APPLICABLE KC STANDARD AND PART NUMBER DESIGNATIONS AS SHOWN ON THIS DRAWING.

6 TOLERANCE UP TO AND INCLUDING -6 SIZE ±2-1/2° ABOVE -6 SIZE ±1-1/2°.

EXAMPLE OF PART NOS.
KC110K8 = TEE, ADJ. END ON RUN, ½" OD TUBING, CORROSION RESISTANT STEEL
KC110D12 = TEE, ADJ. END ON RUN, ¾" OD TUBING, ALUMINUM ALLOY

APPROVED: 5-10-65 REVISED: G REV & REDRAWN 8-1-90

CUSTODIAN: JOHN F. KENNEDY SPACE CENTER

PROCUREMENT SPEC. KSC-F-124

COORDINATION STATUS KSC DE

TEE ASSY, FLARED TUBE, MALE ADJUSTABLE END ON RUN, FOR SEAL RING

STANDARD PART

KC110

SHEET 1 OF 1

KSC FORM 32-85 (CG 4/92)

NOTICE: WHEN GOVERNMENT DRAWINGS, SPECIFICATIONS OR OTHER DATA ARE USED FOR ANY PURPOSE OTHER THAN IN CONNECTION WITH A DEFINITELY RELATED GOVERNMENT PROCUREMENT OPERATION, THE UNITED STATES GOVERNMENT THEREBY INCURS NO RESPONSIBILITY NOR ANY OBLIGATION WHATSOEVER AND THE FACT THAT THE GOVERNMENT MAY HAVE FORMULATED, FURNISHED, OR IN ANY WAY SUPPLIED THE SAID DRAWINGS, SPECIFICATIONS, OR OTHER DATA IS NOT REGARDED BY IMPLICATION OR OTHERWISE AS IN ANY MANNER LICENSING THE HOLDER OR ANY OTHER PERSON OR CORPORATION, OR CONVEYING ANY RIGHTS OR PERMISSION TO MANUFACTURE, USE, OR SELL ANY PATENTED INVENTION THAT MAY IN ANY WAY BE RELATED THERETO.

FED SUP CLASS
4730

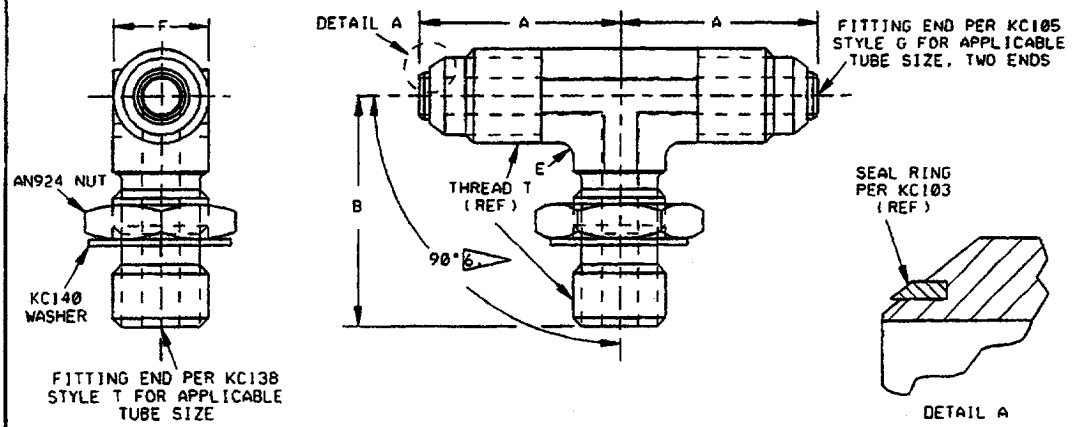

DASH NO. CRE STEEL	DASH NO. AL ALLOY	TUBE OD REF	THREAD T REF	A DIM. +.000 -.063	B DIM. +.000 -.063	E RAD +.03 -.03	F PAD DIM. +.016 -.016	BULKHEAD NUT FOR CRE STEEL ASSY *	BULKHEAD NUT FOR AL ALLOY ASSY	WASHER FOR CRE STEEL ASSY	WASHER FOR AL ALLOY ASSY
K4	D4	¼	7/16-20	.906	1.063	.063	.438	AN924-K4	AN924-D4	KC140C4	KC140D4
K6	D6	⅜	9/16-18	1.078	1.281	.094	.563	AN924-K6	AN924-D6	KC140C6	KC140D6
K8	D8	½	3/4-16	1.266	1.485		.750	AN924-K8	AN924-D8	KC140C8	KC140D8
K10	D10	⅝	7/8-14	1.469	1.735	.125	.875	AN924-K10	AN924-D10	KC140C10	KC140D10
K12	D12	¾	1-1/16-12	1.672	1.969		1.063	AN924-K12	AN924-D12	KC140C12	KC140D12
K16	D16	1	1-5/16-12	1.828	2.078		1.313	AN924-K16	AN924-D16	KC140C16	KC140D16
K20	D20	1¼	1-5/8-12	2.078	2.281		1.625	AN924-K20	AN924-D20	KC140C20	KC140D20
K24	D24	1½	1-7/8-12	2.344	2.422		1.875	AN924-K24	AN924-D24	KC140C24	KC140D24
K28	D28	1¾	2-1/4-12	2.828	2.813		2.250	AN924-K28	AN924-D28	KC140C28	KC140D28
K32	D32	2	2-1/2-12	3.078	2.922	.188	2.500	AN924-K32	AN924-D32	KC140C32	KC140D32

MATERIAL: SEE PROCUREMENT SPECIFICATION.
ALUMINUM ALLOY, 2014-T6, CODE "D"
CORROSION RESISTANT STEEL (CLASS 316), CODE "K" (WAS CODE "C")
*AN924 CRES NUTS MAY BE EITHER 304, CODE "J" OR 316, CODE "K".

FINISH: SEE PROCUREMENT SPECIFICATION.

SCREW THREAD: SEE PROCUREMENT SPECIFICATION.

NOTES:
1. REMOVE BURRS AND SLIVERS. BREAK SHARP EDGES UNLESS OTHERWISE NOTED.
2. DIMENSIONS IN INCHES. UNLESS OTHERWISE SPECIFIED, TOLERANCE DECIMALS ±.016.
3. FOR DESIGN FEATURE PURPOSES, THIS DRAWING TAKES PRECEDENCE OVER PROCUREMENT DOCUMENTS REFERENCED HEREIN.
4. REFERENCED DOCUMENTS SHALL BE OF THE ISSUE IN EFFECT ON THE DATE OF INVITATION FOR BID.
5. MARKING OF FITTINGS SHALL BE CONSISTENT WITH PROCUREMENT SPECIFICATION USING APPLICABLE KC STANDARD AND PART NUMBER DESIGNATIONS AS SHOWN ON THIS DRAWING.

6 TOLERANCE UP TO AND INCLUDING -6 SIZE ±2-1/2° ABOVE -6 SIZE ±1-1/2°.

EXAMPLE OF PART NOS.
KC111K8 = TEE, ADJ. END ON OUTLET, ½" OD TUBING, CORROSION RESISTANT STEEL
KC111D12 = TEE, ADJ. END ON OUTLET, ¾" OD TUBING, ALUMINUM ALLOY

REVISED: (G) REV & REDRAWN 8-1-90
APPROVED: 5-10-65

CUSTODIAN: JOHN F. KENNEDY SPACE CENTER

PROCUREMENT SPEC. KSC-F-124

COORDINATION STATUS KSC DE

TEE ASSY, FLARED TUBE MALE ADJUSTABLE END ON OUTLET, FOR SEAL RING

STANDARD PART KC111

SHEET 1 OF 1

KSC FORM 32-85 (CG 4/92)

NOTICE: WHEN GOVERNMENT DRAWINGS, SPECIFICATIONS OR OTHER DATA ARE USED FOR ANY PURPOSE OTHER THAN IN CONNECTION WITH A DEFINITELY RELATED GOVERNMENT PROCUREMENT OPERATION, THE UNITED STATES GOVERNMENT THEREBY INCURS NO RESPONSIBILITY NOR ANY OBLIGATION WHATSOEVER AND THE FACT THAT THE GOVERNMENT MAY HAVE FORMULATED, FURNISHED, OR IN ANY WAY SUPPLIED THE SAID DRAWINGS, SPECIFICATIONS, OR OTHER DATA IS NOT REGARDED BY IMPLICATION OR OTHERWISE AS IN ANY MANNER LICENSING THE HOLDER OR ANY OTHER PERSON OR CORPORATION, OR CONVEYING ANY RIGHTS OR PERMISSION TO MANUFACTURE, USE, OR SELL ANY PATENTED INVENTION THAT MAY IN ANY WAY BE RELATED THERETO.

FED SUP CLASS
4730

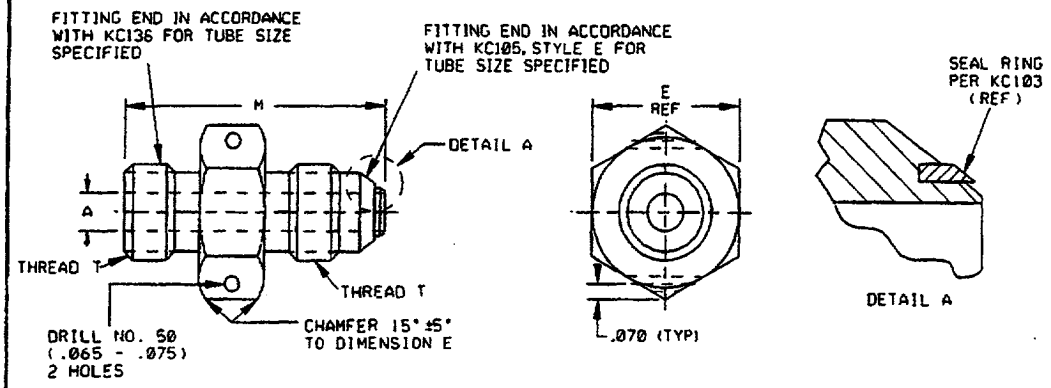

DASH NO. CRE STEEL	DASH NO. AL ALLOY	TUBE OD REF	THREAD T REF	A (REF)	E (REF)	M +.000 -.063
K4	D4	¼	7/16-20	.172	.688	1.234
K6	D6	⅜	9/16-18	.297	.813	1.328
K8	D8	½	3/4-16	.391	1.000	1.516
K10	D10	⅝	7/8-14	.484	1.125	1.687
K12	D12	¾	1-1/16-12	.609	1.375	1.922
K16	D16	1	1-5/16-12	.844	1.625	1.969
K20	D20	1¼	1-5/8-12	1.078	1.875	2.094
K24	D24	1½	1-7/8-12	1.312	2.125	2.266
KK8	D28	1¾	2-1/4-12	1.546	2.500	2.547
K32	D32	2	2-1/2-12	1.780	2.750	2.766

MATERIAL: SEE PROCUREMENT SPECIFICATION.
ALUMINUM ALLOY, 2024-T6, CODE "D"
CORROSION RESISTANT STEEL (CLASS 316), CODE "K" (WAS CODE "C")

FINISH: SEE PROCUREMENT SPECIFICATION.

SCREW THREAD: SEE PROCUREMENT SPECIFICATION.

NOTES:
1. REMOVE BURRS AND SLIVERS. BREAK SHARP EDGES UNLESS OTHERWISE NOTED.
2. DIMENSIONS IN INCHES. UNLESS OTHERWISE SPECIFIED, TOLERANCE DECIMALS ±.016.
3. FOR DESIGN FEATURE PURPOSES, THIS DRAWING TAKES PRECEDENCE OVER PROCUREMENT DOCUMENTS REFERENCED HEREIN.
4. REFERENCED DOCUMENTS SHALL BE OF THE ISSUE IN EFFECT ON THE DATE OF INVITATION FOR BID.
5. MARKING OF FITTINGS SHALL BE CONSISTENT WITH PROCUREMENT SPECIFICATION USING APPLICABLE KC STANDARD AND PART NUMBER DESIGNATIONS AS SHOWN ON THIS DRAWING.

EXAMPLE OF PART NOS.
KC112K4 = ADAPTER, ¼ OD TUBING, CORROSION RESISTANT STEEL
KC112D8 = ADAPTER, ½ OD TUBING, ALUMINUM ALLOY

REVISED: (E) REV & REDRAWN 8-1-90
APPROVED: 5-10-65

CUSTODIAN: JOHN F. KENNEDY SPACE CENTER

PROCUREMENT SPEC. KSC-F-124

COORDINATION STATUS KSC DE

ADAPTER, FLARED TUBE & BOSS FOR SEAL RING

STANDARD PART
KC112
SHEET 1 OF 1

KSC FORM 32-85 (CG 4/92)

NOTICE: WHEN GOVERNMENT DRAWINGS, SPECIFICATIONS OR OTHER DATA ARE USED FOR ANY PURPOSE OTHER THAN IN CONNECTION WITH A DEFINITELY RELATED GOVERNMENT PROCUREMENT OPERATION, THE UNITED STATES GOVERNMENT THEREBY INCURS NO RESPONSIBILITY NOR ANY OBLIGATION WHATSOEVER AND THE FACT THAT THE GOVERNMENT MAY HAVE FORMULATED, FURNISHED, OR IN ANY WAY SUPPLIED THE SAID DRAWINGS, SPECIFICATIONS, OR OTHER DATA IS NOT REGARDED BY IMPLICATION OR OTHERWISE AS IN ANY MANNER LICENSING THE HOLDER OR ANY OTHER PERSON OR CORPORATION, OR CONVEYING ANY RIGHTS OR PERMISSION TO MANUFACTURE, USE, OR SELL ANY PATENTED INVENTION THAT MAY IN ANY WAY BE RELATED THERETO.

NOTICE: WHEN GOVERNMENT DRAWINGS, SPECIFICATIONS OR OTHER DATA ARE USED FOR ANY PURPOSE OTHER THAN IN CONNECTION WITH A DEFINITELY RELATED GOVERNMENT PROCUREMENT OPERATION, THE UNITED STATES GOVERNMENT THEREBY INCURS NO RESPONSIBILITY NOR ANY OBLIGATION WHATSOEVER AND THE FACT THAT THE GOVERNMENT MAY HAVE FORMULATED, FURNISHED, OR IN ANY WAY SUPPLIED THE SAID DRAWINGS, SPECIFICATIONS, OR OTHER DATA IS NOT REGARDED BY IMPLICATION OR OTHERWISE AS IN ANY MANNER LICENSING THE HOLDER OR ANY OTHER PERSON OR CORPORATION, OR CONVEYING ANY RIGHTS OR PERMISSION TO MANUFACTURE, USE, OR SELL ANY PATENTED INVENTION THAT MAY IN ANY WAY BE RELATED THERETO.

FED SUP CLASS 4730

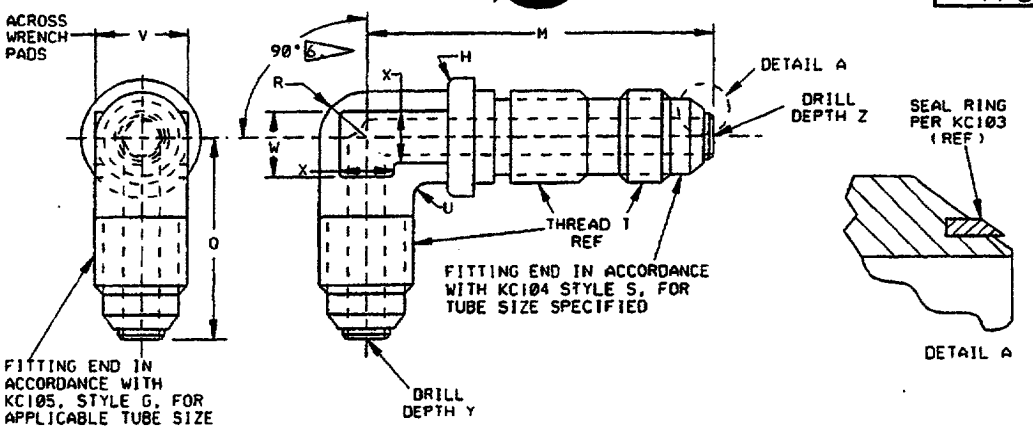

DASH NO. CRE STEEL	DASH NO. AL ALLOY	TUBE OD REF	THREAD T REF	H RAD	M +.000 -.047	O +.000 -.047	R RAD	U RAD	V	W APPROX	X APPROX	Y +.047 -.000	Z +.047 -.000
K4	D4	¼	7/16-20	.063	1.625	1.000	.219	.063	.438	.375	.250	.984	1.609
K6	D6	⅜	9/16-18		1.844	1.125	.261	.094	.563	.500	.313	1.109	1.828
K8	D8	½	3/4-16		2.141	1.391	.375		.750	.625	.438	1.375	2.125
K10	D10	⅝	7/8-14		2.422	1.594	.438		.875	.750	.438	1.641	2.469
K12	D12	¾	1-1/16-12		2.703	1.813	.531	.125	1.063	.875	.500	1.859	2.750
K16	D16	1	1-5/16-12	.094	2.828	1.969	.656		1.313	1.063	.625	2.016	2.875
K20	D20	1¼	1-5/8-12		3.156	2.203	.813		1.625	1.250	.750	2.281	3.234
K24	D24	1½	1-7/8-12		3.453	2.375	.938		1.875	1.438	.875	2.484	3.609
K28	D28	1¾	2-1/4-12		3.828	2.641	1.125	.188	2.250	1.750	1.063	2.781	4.063
K32	D32	2	2-1/2-12		4.141	2.922	1.250		2.563	1.938	1.188	2.938	4.453

MATERIAL: SEE PROCUREMENT SPECIFICATION.
ALUMINUM ALLOY, 2014-T6, CODE "D"
CORROSION RESISTANT STEEL (CLASS 316), CODE "K" (WAS CODE "C")

FINISH: SEE PROCUREMENT SPECIFICATION.

SCREW THREAD: SEE PROCUREMENT SPECIFICATION.

NOTES:
1. REMOVE BURRS AND SLIVERS. BREAK SHARP EDGES UNLESS OTHERWISE NOTED.
2. DIMENSIONS IN INCHES. UNLESS OTHERWISE SPECIFIED, TOLERANCE DECIMALS ±.016.
3. FOR DESIGN FEATURE PURPOSES, THIS DRAWING TAKES PRECEDENCE OVER PROCUREMENT DOCUMENTS REFERENCED HEREIN.
4. REFERENCED DOCUMENTS SHALL BE OF THE ISSUE IN EFFECT ON THE DATE OF INVITATION FOR BID.
5. MARKING OF FITTINGS SHALL BE CONSISTENT WITH PROCUREMENT SPECIFICATION USING APPLICABLE KC STANDARD AND PART NUMBER DESIGNATIONS AS SHOWN ON THIS DRAWING.

6 TOLERANCE UP TO AND INCLUDING -6 SIZE ±2-1/2° ABOVE -6 SIZE ±1-1/2°.

EXAMPLE OF PART NOS.
KC113K8 = ELBOW, ½" OD TUBING, CORROSION RESISTANT STEEL
KC113D12 = ELBOW, ¾" OD TUBING, ALUMINUM ALLOY

APPROVED: 5-10-65 REVISED: (F) REV & REDRAWN 8-1-90

CUSTODIAN: JOHN F. KENNEDY SPACE CENTER

PROCUREMENT SPEC. KSC-F-124

COORDINATION STATUS KSC DE

ELBOW - FLARED TUBE BULKHEAD UNIVERSAL 90° FOR SEAL RING

STANDARD PART KC113

SHEET 1 OF 1

KSC FORM 32-85 (CG 4/92)

FED SUP CLASS
4730

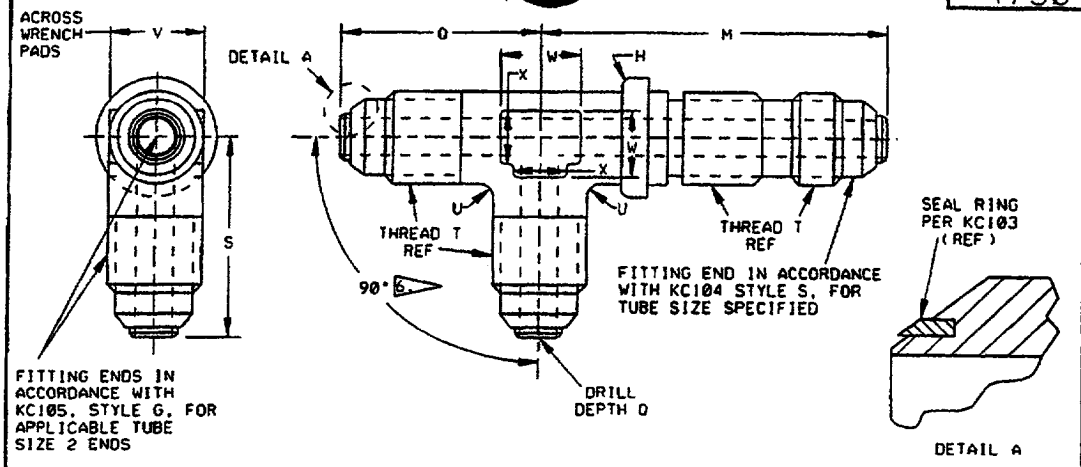

DASH NO. CRE STEEL	DASH NO. AL ALLOY	TUBE OD REF	THREAD T REF	H RAD	M +.000 -.047	O +.000 -.047	S +.047 -.000	U RAD	V	W APPROX	X APPROX
K4	D4	¼	7/16-20	.063	1.625	.938	.953	.063	.438	.375	.250
K6	D6	⅜	9/16-18		1.844	1.109	1.078	.094	.563	.500	.313
K8	D8	½	3/4-16		2.141	1.297	1.344		.750	.688	.438
K10	D10	⅝	7/8-14		2.422	1.500	1.547		.875	.781	.438
K12	D12	¾	1-1/16-12		2.703	1.703	1.766	.125	1.063	.906	.500
K16	D16	1	1-5/16-12	.094	2.828	1.859	1.922		1.313	1.094	.625
K20	D20	1¼	1-5/8-12		3.156	2.109	2.156		1.625	1.313	.750
K24	D24	1½	1-7/8-12		3.453	2.375	2.328	.188	1.875	1.500	.875
K28	D28	1¾	2-1/4-12		3.828	2.859	2.594		2.250	1.781	1.063
K32	D32	2	2-1/2-12		4.141	3.109	2.875		2.563	2.031	1.188

MATERIAL: SEE PROCUREMENT SPECIFICATION.
ALUMINUM ALLOY, 2014-T6, CODE "D"
CORROSION RESISTANT STEEL (CLASS 316), CODE "K" (WAS CODE "C")

FINISH: SEE PROCUREMENT SPECIFICATION.

SCREW THREAD: SEE PROCUREMENT SPECIFICATION.

NOTES:
1. REMOVE BURRS AND SLIVERS. BREAK SHARP EDGES UNLESS OTHERWISE NOTED.
2. DIMENSIONS IN INCHES. UNLESS OTHERWISE SPECIFIED, TOLERANCE DECIMALS ±.016.
3. FOR DESIGN FEATURE PURPOSES, THIS DRAWING TAKES PRECEDENCE OVER PROCUREMENT DOCUMENTS REFERENCED HEREIN.
4. REFERENCED DOCUMENTS SHALL BE OF THE ISSUE IN EFFECT ON THE DATE OF INVITATION FOR BID.
5. MARKING OF FITTINGS SHALL BE CONSISTENT WITH PROCUREMENT SPECIFICATION USING APPLICABLE KC STANDARD AND PART NUMBER DESIGNATIONS AS SHOWN ON THIS DRAWING.

5. TOLERANCE UP TO AND INCLUDING -6 SIZE ±2-1/2° ABOVE -6 SIZE ±1-1/2°.

EXAMPLE OF PART NOS.
KC114KB = TEE, ½" OD TUBING, CORROSION RESISTANT STEEL
KC114D12 = TEE, ¾" OD TUBING, ALUMINUM ALLOY

REVISED: (E) REV & REDRAWN 8-1-90
APPROVED: 5-10-65

CUSTODIAN: JOHN F. KENNEDY SPACE CENTER

PROCUREMENT SPEC. KSC-F-124

COORDINATION STATUS KSC DE

TEE - FLARED TUBE BULKHEAD ON RUN, FOR SEAL RING

STANDARD PART
KC114

SHEET 1 OF 1

KSC FORM 32-85 (CG 4/92)

NOTICE: WHEN GOVERNMENT DRAWINGS, SPECIFICATIONS OR OTHER DATA ARE USED FOR ANY PURPOSE OTHER THAN IN CONNECTION WITH A DEFINITELY RELATED GOVERNMENT PROCUREMENT OPERATION, THE UNITED STATES GOVERNMENT THEREBY INCURS NO RESPONSIBILITY NOR ANY OBLIGATION WHATSOEVER AND THE FACT THAT THE GOVERNMENT MAY HAVE FORMULATED, FURNISHED, OR IN ANY WAY SUPPLIED THE SAID DRAWINGS, SPECIFICATIONS, OR OTHER DATA IS NOT REGARDED BY IMPLICATION OR OTHERWISE AS IN ANY MANNER LICENSING THE HOLDER OR ANY OTHER PERSON OR CORPORATION, OR CONVEYING ANY RIGHTS OR PERMISSION TO MANUFACTURE, USE, OR SELL ANY PATENTED INVENTION THAT MAY IN ANY WAY BE RELATED THERETO.

FED SUP CLASS
4730

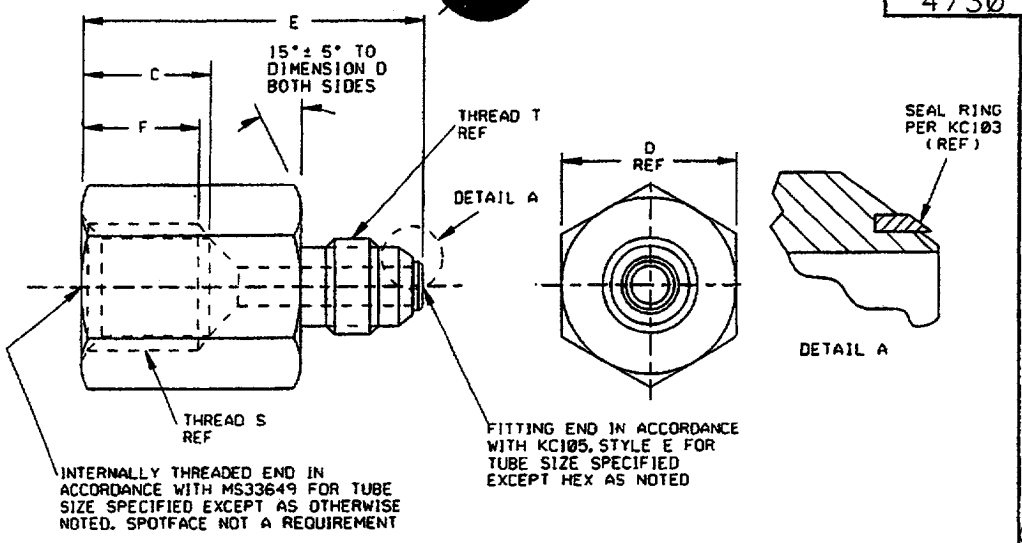

DASH NO.		INTERNALLY THREADED END				EXTERNALLY THREADED END			
CRES STEEL	AL ALLOY	TUBE OD	THREAD S REF	C	F MIN (6)	TUBE OD	THREAD T REF	D REF	E +.000 -.076
K6-4	D6-4	⅜	9/16-18	.609	.482	¼	7/16-20	.813	1.406
K8-4	D8-4	½	3/4-16	.734	.593	¼	7/16-20	1.000	1.594
K8-6	D8-6				.593	⅜	9/16-18		1.562
K10-4	D10-4	⅝	7/8-14	.797	.638	¼	7/16-20	1.125	1.687
K10-6	D10-6				.638	⅜	9/16-18		1.656
K10-8	D10-8				.638	½	3/4-16		1.766
K12-6	D12-6	¾	1-1/16-12	.922	.656	⅜	9/16-18	1.375	1.828
K12-8	D12-8				.656	½	3/4-16		1.937
K12-10	D12-10				.656	⅝	7/8-14		2.031
K16-6	D16-6	1	1-5/16-12	.953	.687	⅜	9/16-18	1.625	1.937
K16-8	D16-8				.687	½	3/4-16		2.047
K16-10	D16-10				.687	⅝	7/8-14		2.125
K16-12	D16-12				.687	¾	1-1/16-12		2.219
K20-8	D20-8	1¼	1-5/8-12	1.000	.734	½	3/4-16	1.875	2.187
K20-10	D20-10				.734	⅝	7/8-14		2.266
K20-12	D20-12				.734	¾	1-1/16-12		2.344
K20-16	D20-16				.734	1	1-5/16-12		2.312

REVISED: (D) REV & REDRAWN 8-1-90 (E) ADDED DIMENSION F 9-1-97

APPROVED: 5-10-65

CUSTODIAN: JOHN F. KENNEDY SPACE CENTER

PROCUREMENT SPEC. KSC-F-124

COORDINATION STATUS KSC DE

BUSHING - SCREW THREAD EXPANDER FOR SEAL RING

STANDARD PART

KC115

SHEET 1 OF 2

KSC FORM 32-85 (CG 4/92)

NOTICE: WHEN GOVERNMENT DRAWINGS, SPECIFICATIONS OR OTHER DATA ARE USED FOR ANY PURPOSE OTHER THAN IN CONNECTION WITH A DEFINITELY RELATED GOVERNMENT PROCUREMENT OPERATION, THE UNITED STATES GOVERNMENT THEREBY INCURS NO RESPONSIBILITY NOR ANY OBLIGATION WHATSOEVER AND THE FACT THAT THE GOVERNMENT MAY HAVE FORMULATED, FURNISHED, OR IN ANY WAY SUPPLIED THE SAID DRAWINGS, SPECIFICATIONS, OR OTHER DATA IS NOT REGARDED BY IMPLICATION OR OTHERWISE AS IN ANY MANNER LICENSING THE HOLDER OR ANY OTHER PERSON OR CORPORATION, OR CONVEYING ANY RIGHTS OR PERMISSION TO MANUFACTURE, USE, OR SELL ANY PATENTED INVENTION THAT MAY IN ANY WAY BE RELATED THERETO.

FED SUP CLASS
4730

MATERIAL: SEE PROCUREMENT SPECIFICATION.
ALUMINUM ALLOY, 2024-T6, CODE "D"
CORROSION RESISTANT STEEL (CLASS 316), CODE "K" (WAS CODE "C")

FINISH: SEE PROCUREMENT SPECIFICATION.

SCREW THREAD: SEE PROCUREMENT SPECIFICATION.

NOTES:

1. REMOVE BURRS AND SLIVERS. BREAK SHARP EDGES UNLESS OTHERWISE NOTED.
2. DIMENSIONS IN INCHES. UNLESS OTHERWISE SPECIFIED, TOLERANCE DECIMALS ±.016.
3. FOR DESIGN FEATURE PURPOSES, THIS DRAWING TAKES PRECEDENCE OVER PROCUREMENT DOCUMENTS REFERENCED HEREIN.
4. REFERENCED DOCUMENTS SHALL BE OF THE ISSUE IN EFFECT ON THE DATE OF INVITATION FOR BID.
5. MARKING OF FITTINGS SHALL BE CONSISTENT WITH PROCUREMENT SPECIFICATION USING APPLICABLE KC STANDARD AND PART NUMBER DESIGNATIONS AS SHOWN ON THIS DRAWING.
6. F MIN IS THE FULL THREAD DEPTH REQUIREMENT.

EXAMPLE OF PART NOS.
KC115K8-6 = BUSHING, ½" BOSS TO ⅜" TUBE, CORROSION RESISTANT STEEL.
KC115D8-6 = BUSHING, ½" BOSS TO ⅜" TUBE, ALUMINUM ALLOY.

REVISED: (D) REV & REDRAWN 8-1-90 (E) ADDED FLAG NOTE 6 9-1-97

APPROVED: 5-10-65

CUSTODIAN: JOHN F. KENNEDY SPACE CENTER

PROCUREMENT SPEC. KSC-F-124

COORDINATION STATUS KSC OE

BUSHING - SCREW THREAD EXPANDER FOR SEAL RING

STANDARD PART

KC115

SHEET 2 OF 2

KSC FORM 32-85 (CG 4/92)

NOTICE: WHEN GOVERNMENT DRAWINGS, SPECIFICATIONS OR OTHER DATA ARE USED FOR ANY PURPOSE OTHER THAN IN CONNECTION WITH A DEFINITELY RELATED GOVERNMENT PROCUREMENT OPERATION, THE UNITED STATES GOVERNMENT THEREBY INCURS NO RESPONSIBILITY NOR ANY OBLIGATION WHATSOEVER AND THE FACT THAT THE GOVERNMENT MAY HAVE FORMULATED, FURNISHED, OR IN ANY WAY SUPPLIED THE SAID DRAWINGS, SPECIFICATIONS, OR OTHER DATA IS NOT REGARDED BY IMPLICATION OR OTHERWISE AS IN ANY MANNER LICENSING THE HOLDER OR ANY OTHER PERSON OR CORPORATION, OR CONVEYING ANY RIGHTS OR PERMISSION TO MANUFACTURE, USE, OR SELL ANY PATENTED INVENTION THAT MAY IN ANY WAY BE RELATED THERETO.

FED SUP CLASS
4730

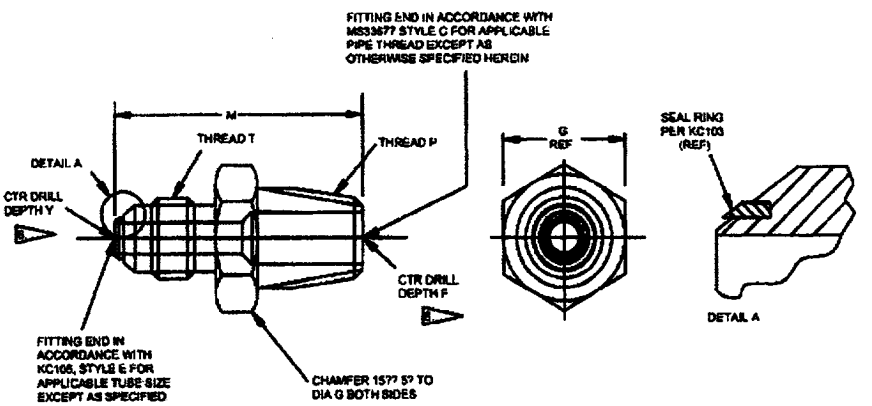

MATERIAL: SEE PROCUREMENT SPECIFICATION.
ALUMINUM ALLOY, 2024-T6, CODE "D"
CORROSION RESISTANT STEEL (CLASS 315), CODE "K" (WAS CODE "C")

FINISH: SEE PROCUREMENT SPECIFICATION.

SCREW THREAD: SEE PROCUREMENT SPECIFICATION.

NOTES:

1. REMOVE BURRS AND SLIVERS. BREAK SHARP EDGES UNLESS OTHERWISE NOTED.
2. DIMENSIONS IN INCHES. UNLESS OTHERWISE SPECIFIED, TOLERANCE DECIMALS ±T.015.
3. FOR DESIGN FEATURE PURPOSES, THIS DRAWING TAKES PRECEDENCE OVER PROCUREMENT DOCUMENTS REFERENCED HEREIN.
4. REFERENCED DOCUMENTS SHALL BE OF THE ISSUE IN EFFECT ON THE DATE OF INVITATION FOR BID.
5. MARKING OF FITTINGS SHALL BE CONSISTENT WITH PROCUREMENT SPECIFICATION USING APPLICABLE KC STANDARD AND PART NUMBER DESIGNATIONS AS SHOWN ON THIS DRAWING.

B AT THE OPTION OF THE MANUFACTURER, THE SMALLER INSIDE DIAMETER MAY BE DRILLED FROM PORT TO PORT

EXAMPLE OF PART NOS.
KC116K8-4 = NIPPLE, 1/2" OD TUBING TO 1/4" OD PIPE, CORROSION RESISTANT STEEL
KC116D8-4 = NIPPLE, 1/2" OD TUBING TO 1/4" OD PIPE, ALUMINUM ALLOY

REVISED: CHANGED "G" DIMENSION, SEE APPENDIX B 1-15-09

APPROVED: 1-15-09

CUSTODIAN: JOHN F. KENNEDY SPACE CENTER		
PROCUREMENT SPEC. KSC-P-124	NIPPLE - FLARED TUBE & PIPE THREAD FOR SEAL RING	STANDARD PART KC116
COORDINATION STATUS KSC DE		SHEET 1 OF 2

KSC FORM 32-85 (CO 4/92)

NOTICE: WHEN GOVERNMENT DRAWINGS, SPECIFICATIONS OR OTHER DATA ARE USED FOR ANY PURPOSE OTHER THAN IN CONNECTION WITH A DEFINITELY RELATED GOVERNMENT PROCUREMENT OPERATION, THE UNITED STATES GOVERNMENT THEREBY INCURS NO RESPONSIBILITY NOR ANY OBLIGATION WHATSOEVER AND THE FACT THAT THE GOVERNMENT MAY HAVE FORMULATED, FURNISHED, OR IN ANY WAY SUPPLIED THE SAID DRAWINGS, SPECIFICATIONS, OR OTHER DATA IS NOT REGARDED BY IMPLICATION OR OTHERWISE AS IN ANY MANNER LICENSING THE HOLDER OR ANY OTHER PERSON OR CORPORATION, OR CONVEYING ANY RIGHTS OR PERMISSION TO MANUFACTURE, USE, OR SELL ANY PATENTED INVENTION THAT MAY IN ANY WAY BE RELATED THERETO.

FED SUP CLASS
4730

DASH NO. CRES STEEL	DASH NO. AL ALLOY	TUBE OD REF	THREAD T REF	THREAD P ANPT	M +.000 -.075	F	Y	G	
K4-2	D4-2	1/4	7/16-20	1/8-27	1.125	.469		.500	
K4-4	D4-4			1/4-18	1.391	.688		.563	
K6-2	D6-2	3/8	9/16-18	1/8-27	1.203		.688	.625	
K6-4	D6-4			1/4-18	1.391	.688		.625	
K6-6	D6-6			3/8-18	1.422	.688		.750	
K6-8	D6-8			1/2-14	1.641	.875		.875	±.004
K8-4	D8-4	1/2	3/4-16	1/4-18	1.516		.844	.813	
K8-6	D8-6			3/8-18	1.516	.688		.813	
K8-8	D8-8			1/2-14	1.736	.875		.875	
K10-4	D10-4	5/8	7/8-14	1/4-18	1.722		.844	.938	
K10-6	D10-6			3/8-18	1.656	.812			
K10-8	D10-8			1/2-14	1.844	.906			
K10-12	D10-12			3/4-14	1.859	.906		1.125	
K12-4	D12-4	3/4	1-1/16-12	1/4-18	1.843		1.046		
K12-6	D12-6			3/8-18	1.859		1.000		
K12-8	D12-8			1/2-14	1.969		1.063		
K12-12	D12-12			3/4-14	1.969	.906			±.005
K12-16	D12-16			1-11½	2.203	1.063		1.375	
K16-8	D16-8	1	1-5/16-12	1/2-14	2.015		.906		
K16-12	D16-12			3/4-14	2.047		1.094		
K16-16	D16-16			1-11½	2.234	1.125			
K20-12	D20-12	1 1/4	1-5/8-12	3/4-14	2.140		1.031	1.688	
K20-16	D20-16			1-11½	2.344		1.250		
K20-20	D20-20			1¼-11½	2.375	1.188			
K24-12	D24-12	1 1/2	1-7/8-12	3/4-14	2.203		1.031	2.000	±.016
K24-16	D24-16			1-11½	2.453		1.156		
K24-20	D24-20			1¼-11½	2.562		1.344		
K24-24	D24-24			1½-11½	2.593	1.031			
K28-16	D28-16	1 3/4	2-1/4-12	1-11½	2.797		1.125	2.375	
K28-20	D28-20			1¼-11½	2.812		1.500		
K28-24	D28-24			1½-11½	2.844		1.438		±.020
K32-20	D32-20	2	2 1/2-12	1¼-11½	3.079		1.500	2.625	
K32-24	D32-24			1½-11½	3.094		1.438		
K32-32	D32-32			2-11½	3.125	1.438			

REVISED: CHANGED "G" DIMENSION, SEE APPENDIX B 1-15-09

APPROVED: 1-15-09

NOTICE: WHEN GOVERNMENT DRAWINGS, SPECIFICATIONS OR OTHER DATA ARE USED FOR ANY PURPOSE OTHER THAN IN CONNECTION WITH A DEFINITELY RELATED GOVERNMENT PROCUREMENT OPERATION, THE UNITED STATES GOVERNMENT THEREBY INCURS NO RESPONSIBILITY NOR ANY OBLIGATION WHATSOEVER, AND THE FACT THAT THE GOVERNMENT MAY HAVE FORMULATED, FURNISHED, OR IN ANY WAY SUPPLIED THE SAID DRAWINGS, SPECIFICATIONS, OR OTHER DATA IS NOT REGARDED BY IMPLICATION OR OTHERWISE AS IN ANY MANNER LICENSING THE HOLDER OR ANY OTHER PERSON OR CORPORATION, OR CONVEYING ANY RIGHTS OR PERMISSION TO MANUFACTURE, USE, OR SELL ANY PATENTED INVENTION THAT MAY IN ANY WAY BE RELATED THERETO.

CUSTODIAN: JOHN F. KENNEDY SPACE CENTER

PROCUREMENT SPEC.
KSC-F-124

COORDINATION STATUS
KSC DE

NIPPLE - FLARED TUBE & PIPE THREAD FOR SEAL RING

STANDARD PART
KC116

SHEET 2 OF 2

KSC FORM 32-65 (CG 4/82)

NOTICE: WHEN GOVERNMENT DRAWINGS, SPECIFICATIONS OR OTHER DATA ARE USED FOR ANY PURPOSE OTHER THAN IN CONNECTION WITH A DEFINITELY RELATED GOVERNMENT PROCUREMENT OPERATION, THE UNITED STATES GOVERNMENT THEREBY INCURS NO RESPONSIBILITY NOR ANY OBLIGATION WHATSOEVER AND THE FACT THAT THE GOVERNMENT MAY HAVE FORMULATED, FURNISHED, OR IN ANY WAY SUPPLIED THE SAID DRAWINGS, SPECIFICATIONS, OR OTHER DATA IS NOT REGARDED BY IMPLICATION OR OTHERWISE AS IN ANY MANNER LICENSING THE HOLDER OR ANY OTHER PERSON OR CORPORATION, OR CONVEYING ANY RIGHTS OR PERMISSION TO MANUFACTURE, USE, OR SELL ANY PATENTED INVENTION THAT MAY IN ANY WAY BE RELATED THERETO.

FED SUP CLASS 4730

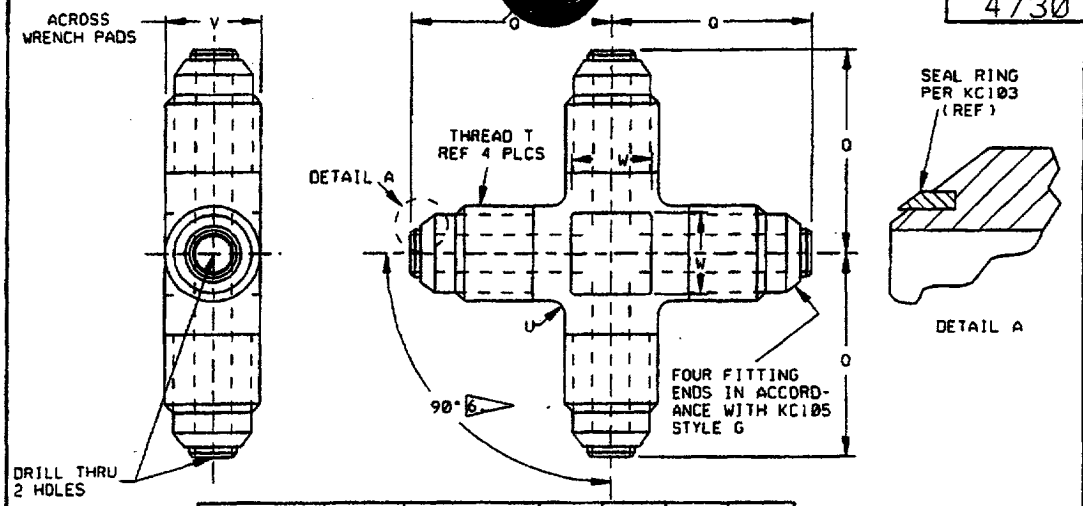

DASH NO. CRE STEEL	DASH NO. AL ALLOY	TUBE OD REF	THREAD T REF	O +.000 -.047	U RAD	V	W APPROX
K4	D4	¼	7/16-20	.906	.063	.438	.375
K6	D6	⅜	9/16-18	1.078	.094	.563	.500
K8	D8	½	3/4-16	1.266		.750	.688
K10	D10	⅝	7/8-14	1.469	.125	.875	.781
K12	D12	¾	1-1/16-12	1.672		1.063	.906
K16	D16	1	1-5/16-12	1.828		1.313	1.094
K20	D20	1¼	1-5/8-12	2.078		1.625	1.313
K24	D24	1½	1-7/8-12	2.344		1.875	1.500
K28	D28	1¾	2-1/4-12	2.828		2.250	1.781
K32	D32	2	2-1/2-12	3.078	.188	2.563	2.563

MATERIAL: SEE PROCUREMENT SPECIFICATION.
ALUMINUM ALLOY, 2014-T6, CODE "D"
CORROSION RESISTANT STEEL (CLASS 316), CODE "K" (WAS CODE "C")

FINISH: SEE PROCUREMENT SPECIFICATION.

SCREW THREAD: SEE PROCUREMENT SPECIFICATION.

NOTES:
1. REMOVE BURRS AND SLIVERS. BREAK SHARP EDGES UNLESS OTHERWISE NOTED.
2. DIMENSIONS IN INCHES. UNLESS OTHERWISE SPECIFIED, TOLERANCE DECIMALS ±.016.
3. FOR DESIGN FEATURE PURPOSES. THIS DRAWING TAKES PRECEDENCE OVER PROCUREMENT DOCUMENTS REFERENCED HEREIN.
4. REFERENCED DOCUMENTS SHALL BE OF THE ISSUE IN EFFECT ON THE DATE OF INVITATION FOR BID.
5. MARKING OF FITTINGS SHALL BE CONSISTENT WITH PROCUREMENT SPECIFICATION USING APPLICABLE KC STANDARD AND PART NUMBER DESIGNATIONS AS SHOWN ON THIS DRAWING.

6 TOLERANCE UP TO AND INCLUDING -6 SIZE ±2-1/2° ABOVE -6 SIZE ±1-1/2°.

EXAMPLE OF PART NOS.
KC117K8 = CROSS, ½" OD TUBING, CORROSION RESISTANT STEEL
KC117D12 = CROSS, ¾" OD TUBING, ALUMINUM ALLOY

APPROVED: 5-10-65 REVISED: (E) REV & REDRAWN 8-1-90

CUSTODIAN: JOHN F. KENNEDY SPACE CENTER

PROCUREMENT SPEC. KSC-F-124

COORDINATION STATUS KSC DE

CROSS - FLARED TUBE FOR SEAL RING

STANDARD PART KC117

SHEET 1 OF 1

KSC FORM 32-85 (CG 4/92)

FED SUP CLASS 4730

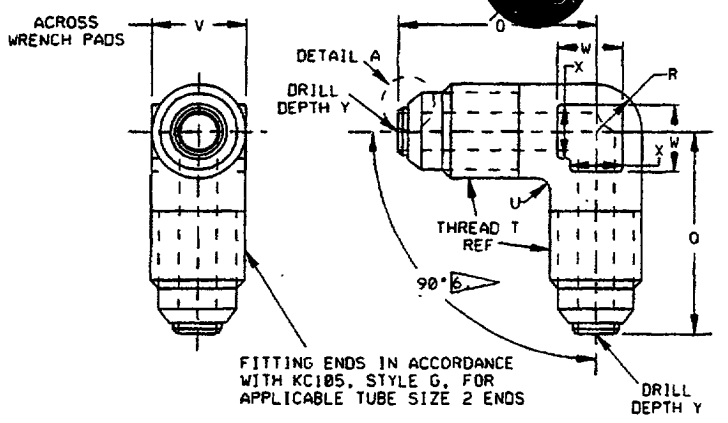

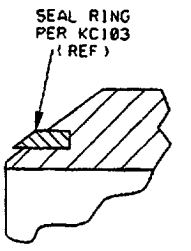

DASH NO. CRE STEEL	DASH NO. AL ALLOY	TUBE OD REF	THREAD T REF	O +.000 -.047	R RAD	U RAD	V 7	W APPROX	X APPROX	Y +.047 -.000
K4	D4	¼	7/16-20	.936	.219	.063	.438	.375	.250	.937
K6	D6	⅜	9/16-18	1.108	.281	.094	.563	.500	.313	1.125
K8	D8	½	3/4-16	1.296	.375		.750	.625	.438	1.312
K10	D10	⅝	7/8-14	1.499	.438		.875	.750	.438	1.515
K12	D12	¾	1-1/16-12	1.702	.531		1.063	.875	.500	1.718
K16	D16	1	1-5/16-12	1.858	.656	.125	1.313	1.063	.625	1.937
K20	D20	1¼	1-5/8-12	2.108	.813		1.625	1.250	.750	2.187
K24	D24	1½	1-7/8-12	2.374	.938		1.875	1.438	.875	2.484
K28	D28	1¾	2-1/4-12	2.858	1.125	.188	2.250	1.750	1.063	2.937
K32	D32	2	2-1/2-12	3.108	1.250	.250	2.563	2.000	1.188	3.250

MATERIAL: SEE PROCUREMENT SPECIFICATION.
ALUMINUM ALLOY, 2014-T6, CODE "D"
CORROSION RESISTANT STEEL (CLASS 316), CODE "K" (WAS CODE "C")

FINISH: SEE PROCUREMENT SPECIFICATION.

SCREW THREAD: SEE PROCUREMENT SPECIFICATION.

NOTES:
1. REMOVE BURRS AND SLIVERS. BREAK SHARP EDGES UNLESS OTHERWISE NOTED.
2. DIMENSIONS IN INCHES. UNLESS OTHERWISE SPECIFIED, TOLERANCE DECIMALS ±.016.
3. FOR DESIGN FEATURE PURPOSES, THIS DRAWING TAKES PRECEDENCE OVER PROCUREMENT DOCUMENTS REFERENCED HEREIN.
4. REFERENCED DOCUMENTS SHALL BE OF THE ISSUE IN EFFECT ON THE DATE OF INVITATION FOR BID.
5. MARKING OF FITTINGS SHALL BE CONSISTENT WITH PROCUREMENT SPECIFICATION USING APPLICABLE KC STANDARD AND PART NUMBER DESIGNATIONS AS SHOWN ON THIS DRAWING.

6 TOLERANCE UP TO AND INCLUDING -6 SIZE ±2-1/2° ABOVE -6 SIZE ±1-1/2°.

7 V DIMENSION FOR -32 SIZE EQUAL TO 2.500" IS ACCEPTABLE BUT 2.563" IS PREFERRED.

EXAMPLE OF PART NOS.
KC118K8 = ELBOW, ½" OD TUBING, CORROSION RESISTANT STEEL
KC118D12 = ELBOW, ¾" OD TUBING, ALUMINUM ALLOY

REVISED: (D) REV & REDRAWN 8-1-90 (E) ADDED NOTE 7, 7-24-97

APPROVED: 5-10-65

CUSTODIAN: JOHN F. KENNEDY SPACE CENTER

PROCUREMENT SPEC. KSC-F-124

COORDINATION STATUS KSC DE

ELBOW - FLARED TUBE 90°, FOR SEAL RING

STANDARD PART KC118

SHEET 1 OF 1

KSC FORM 32-85 (CG 4/92)

NOTICE: WHEN GOVERNMENT DRAWINGS, SPECIFICATIONS OR OTHER DATA ARE USED FOR ANY PURPOSE OTHER THAN IN CONNECTION WITH A DEFINITELY RELATED GOVERNMENT PROCUREMENT OPERATION, THE UNITED STATES GOVERNMENT THEREBY INCURS NO RESPONSIBILITY NOR ANY OBLIGATION WHATSOEVER AND THE FACT THAT THE GOVERNMENT MAY HAVE FORMULATED, FURNISHED, OR IN ANY WAY SUPPLIED THE SAID DRAWINGS, SPECIFICATIONS, OR OTHER DATA IS NOT REGARDED BY IMPLICATION OR OTHERWISE AS IN ANY MANNER LICENSING THE HOLDER OR ANY OTHER PERSON OR CORPORATION, OR CONVEYING ANY RIGHTS OR PERMISSION TO MANUFACTURE, USE, OR SELL ANY PATENTED INVENTION THAT MAY IN ANY WAY BE RELATED THERETO.

NOTICE: WHEN GOVERNMENT DRAWINGS, SPECIFICATIONS OR OTHER DATA ARE USED FOR ANY PURPOSE OTHER THAN IN CONNECTION WITH A DEFINITELY RELATED GOVERNMENT PROCUREMENT OPERATION, THE UNITED STATES GOVERNMENT THEREBY INCURS NO RESPONSIBILITY NOR ANY OBLIGATION WHATSOEVER AND THE FACT THAT THE GOVERNMENT MAY HAVE FORMULATED, FURNISHED, OR IN ANY WAY SUPPLIED THE SAID DRAWINGS, SPECIFICATIONS, OR OTHER DATA IS NOT REGARDED BY IMPLICATION OR OTHERWISE AS IN ANY MANNER LICENSING THE HOLDER OR ANY OTHER PERSON OR CORPORATION, OR CONVEYING ANY RIGHTS OR PERMISSION TO MANUFACTURE, USE, OR SELL ANY PATENTED INVENTION THAT MAY IN ANY WAY BE RELATED THERETO.

FED SUP CLASS 4730

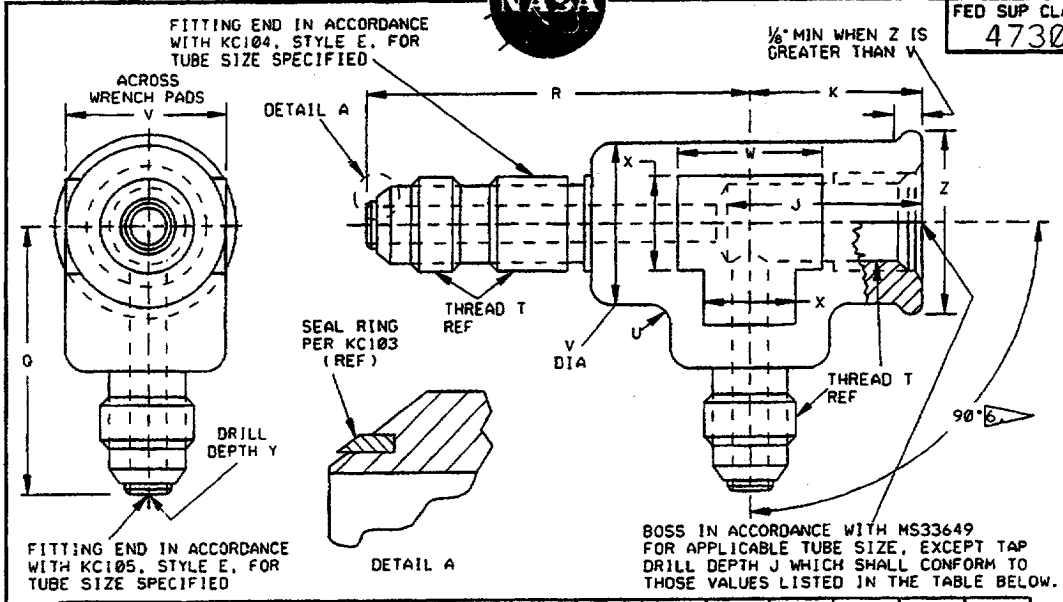

DASH NO. CRE STEEL	DASH NO. AL ALLOY	TUBE OD REF	THREAD T REF	J +.047 -.000	K +.000 -.047	Q +.000 -.047	R +.000 -.047	U RAD	V	W APPROX	X APPROX	Y +.047 -.000	Z DIA
K4	D4	1/4	7/16-20	.906	.797	1.235	1.797	.094	.750	.688	.438	1.188	.750
K6	D6	3/8	9/16-18	1.031	.860	1.297	2.047	.125	.875	.781		1.281	.875
K8	D8	1/2	3/4-16	1.250	1.047	1.485	2.203		1.063	.906	.500	1.469	1.063
K10	D10	5/8	7/8-14	1.469	1.203	1.672	2.422					1.750	1.188
K12	D12	3/4	1-1/16-12	1.750	1.391	1.860	2.672		1.313	1.094	.625	1.875	1.438
K16	D16	1	1-5/16-12	2.063	1.578	2.110	2.891		1.625	1.313	.750	2.094	1.688
K20	D20	1 1/4	1-5/8-12	2.313	1.766	2.297	3.078		1.875	1.500	.875	2.250	2.000

MATERIAL: SEE PROCUREMENT SPECIFICATION.
ALUMINUM ALLOY, 2014-T6, CODE "D"
CORROSION RESISTANT STEEL (CLASS 316), CODE "K" (WAS CODE "C")

FINISH: SEE PROCUREMENT SPECIFICATION.

SCREW THREAD: SEE PROCUREMENT SPECIFICATION.

NOTES:
1. REMOVE BURRS AND SLIVERS. BREAK SHARP EDGES UNLESS OTHERWISE NOTED.
2. DIMENSIONS IN INCHES. UNLESS OTHERWISE SPECIFIED, TOLERANCE DECIMALS ±.016.
3. FOR DESIGN FEATURE PURPOSES, THIS DRAWING TAKES PRECEDENCE OVER PROCUREMENT DOCUMENTS REFERENCED HEREIN.
4. REFERENCED DOCUMENTS SHALL BE OF THE ISSUE IN EFFECT ON THE DATE OF INVITATION FOR BID.
5. MARKING OF FITTINGS SHALL BE CONSISTENT WITH PROCUREMENT SPECIFICATION USING APPLICABLE KC STANDARD AND PART NUMBER DESIGNATIONS AS SHOWN ON THIS DRAWING.

6 TOLERANCE UP TO AND INCLUDING -6 SIZE ±2-1/2° ABOVE -6 SIZE ±1-1/2°.

EXAMPLE OF PART NOS.
KC119K8 = TEE, INTERNAL THREAD ON RUN, 1/2" OD TUBING, CORROSION RESISTANT STEEL
KC119D12 = TEE, INTERNAL THREAD ON RUN, 3/4" OD TUBING, ALUMINUM ALLOY

REVISED: (E) REV & REDRAWN 8-1-90
APPROVED: 5-10-65

CUSTODIAN: JOHN F. KENNEDY SPACE CENTER

PROCUREMENT SPEC. KSC-F-124

COORDINATION STATUS KSC DE

TEE - FLARED TUBE, INTERNAL THREAD ON RUN, FOR SEAL RING

STANDARD PART KC119

SHEET 1 OF 1

KSC FORM 32-85 (CG 4/92)

NOTICE: WHEN GOVERNMENT DRAWINGS, SPECIFICATIONS OR OTHER DATA ARE USED FOR ANY PURPOSE OTHER THAN IN CONNECTION WITH A DEFINITELY RELATED GOVERNMENT PROCUREMENT OPERATION, THE UNITED STATES GOVERNMENT THEREBY INCURS NO RESPONSIBILITY NOR ANY OBLIGATION WHATSOEVER AND THE FACT THAT THE GOVERNMENT MAY HAVE FORMULATED, FURNISHED, OR IN ANY WAY SUPPLIED THE SAID DRAWINGS, SPECIFICATIONS, OR OTHER DATA IS NOT REGARDED BY IMPLICATION OR OTHERWISE AS IN ANY MANNER LICENSING THE HOLDER OR ANY OTHER PERSON OR CORPORATION, OR CONVEYING ANY RIGHTS OR PERMISSION TO MANUFACTURE, USE, OR SELL ANY PATENTED INVENTION THAT MAY IN ANY WAY BE RELATED THERETO.

FED SUP CLASS 4730

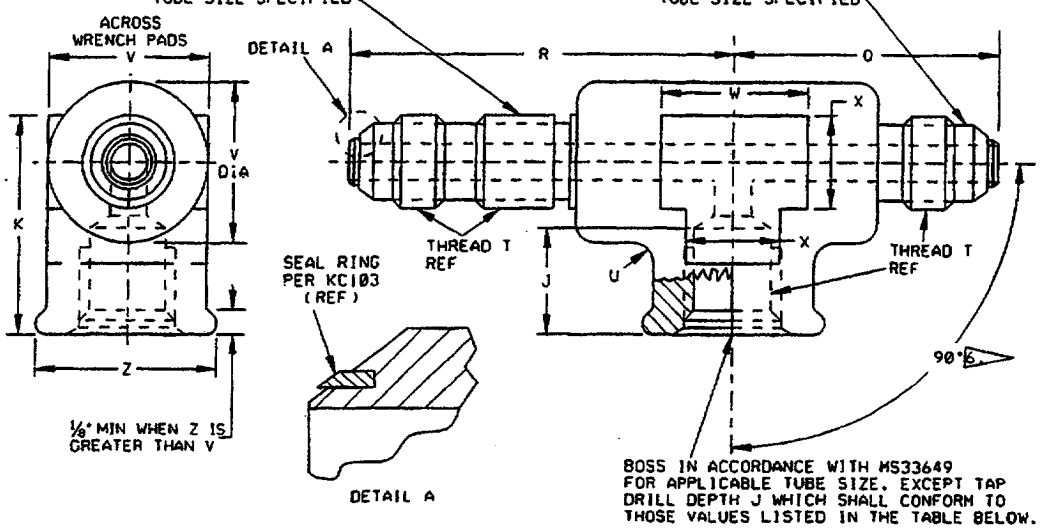

DASH NO. CRE STEEL	DASH NO. AL ALLOY	TUBE OD REF	THREAD T REF	J +.047 -.000	K +.000 -.047	O +.000 -.047	R +.000 -.047	U RAD	V	W APPROX	X APPROX	Z DIA
K4	D4	1/4	7/16-20	.750	.797	1.235	1.797	.094	.750	.688	.438	.750
K6	D6	3/8	9/16-18	.813	.860	1.297	2.047	.125	.875	.781		.875
K8	D8	1/2	3/4-16	1.000	1.047	1.485	2.203		1.063	.906	.500	1.063
K10	D10	5/8	7/8-14	1.156	1.203	1.672	2.422					1.188
K12	D12	3/4	1-1/16-12	1.344	1.391	1.860	2.672		1.313	1.094	.625	1.438
K16	D16	1	1-5/16-12	1.531	1.578	2.110	2.891		1.625	1.313	.750	1.688
K20	D20	1 1/4	1-5/8-12	1.719	1.766	2.297	3.078		1.875	1.500	.875	2.000

MATERIAL: SEE PROCUREMENT SPECIFICATION.
ALUMINUM ALLOY, 2014-T6, CODE "D"
CORROSION RESISTANT STEEL (CLASS 316), CODE "K" (WAS CODE "C")

FINISH: SEE PROCUREMENT SPECIFICATION.

SCREW THREAD: SEE PROCUREMENT SPECIFICATION.

NOTES:
1. REMOVE BURRS AND SLIVERS. BREAK SHARP EDGES UNLESS OTHERWISE NOTED.
2. DIMENSIONS IN INCHES. UNLESS OTHERWISE SPECIFIED, TOLERANCE DECIMALS ±.016.
3. FOR DESIGN FEATURE PURPOSES, THIS DRAWING TAKES PRECEDENCE OVER PROCUREMENT DOCUMENTS REFERENCED HEREIN.
4. REFERENCED DOCUMENTS SHALL BE OF THE ISSUE IN EFFECT ON THE DATE OF INVITATION FOR BID.
5. MARKING OF FITTINGS SHALL BE CONSISTENT WITH PROCUREMENT SPECIFICATION USING APPLICABLE KC STANDARD AND PART NUMBER DESIGNATIONS AS SHOWN ON THIS DRAWING.

6 TOLERANCE UP TO AND INCLUDING -6 SIZE ±2-1/2° ABOVE -6 SIZE ±1-1/2°.

EXAMPLE OF PART NOS.
KC120K8 = TEE, INTERNAL THREAD ON SIDE, 1/2" OD TUBING, CORROSION RESISTANT STEEL
KC120D12 = TEE, INTERNAL THREAD ON SIDE, 3/4" OD TUBING, ALUMINUM ALLOY

REVISED: (E) REV 6 REDRAWN 8-1-90

APPROVED: 5-10-65

CUSTODIAN: JOHN F. KENNEDY SPACE CENTER		
PROCUREMENT SPEC. KSC-F-124	TEE - FLARED TUBE, INTERNAL THREAD ON SIDE, FOR SEAL RING	STANDARD PART
COORDINATION STATUS		KC120
KSC DE		SHEET 1 OF 1

KSC FORM 32-85 (CG 4/92)

NOTICE: WHEN GOVERNMENT DRAWINGS, SPECIFICATIONS OR OTHER DATA ARE USED FOR ANY PURPOSE OTHER THAN IN CONNECTION WITH A DEFINITELY RELATED GOVERNMENT PROCUREMENT OPERATION, THE UNITED STATES GOVERNMENT THEREBY INCURS NO RESPONSIBILITY NOR ANY OBLIGATION WHATSOEVER AND THE FACT THAT THE GOVERNMENT MAY HAVE FORMULATED, FURNISHED, OR IN ANY WAY SUPPLIED THE SAID DRAWINGS, SPECIFICATIONS, OR OTHER DATA IS NOT REGARDED BY IMPLICATION OR OTHERWISE AS IN ANY MANNER LICENSING THE HOLDER OR ANY OTHER PERSON OR CORPORATION, OR CONVEYING ANY RIGHTS OR PERMISSION TO MANUFACTURE, USE, OR SELL ANY PATENTED INVENTION THAT MAY IN ANY WAY BE RELATED THERETO.

FED SUP CLASS 4730

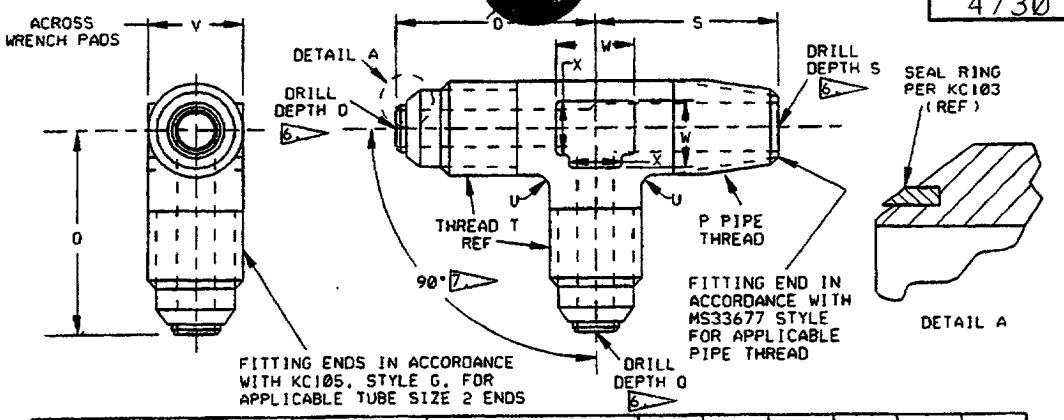

DASH NO. CRES STEEL	DASH NO. AL ALLOY	TUBE OD REF	THREAD T REF	PIPE THREAD END: THREAD P ANPT	PIPE THREAD END: MS33677 STYLE	6 O +.000 -.047	6 S +.000 -.047	U RAD	V	W APPROX	X APPROX
K4-2	D4-2	¼	7/16-20	1/8-27	A	.906	.797	.063	.438	.375	.250
K6-4	D6-4	⅜	9/16-18	1/4-18		1.078	1.109	.094	.563	.562	.313
K8-6	D8-6	½	3/4-16	3/8-18		1.266	1.234		.750	.688	.313
K10-8	D10-8	⅝	7/8-14	1/2-14		1.469	1.484		.875	.750	.438
K12-12	D12-12	¾	1-1/16-12	3/4-14		1.672	1.609		1.063	.875	
K16-12	D16-12	1	1-5/16-12	3/4-14		1.828	1.734		1.313	1.063	.500
K16-16	D16-16			1-11½	B		1.984	.125		1.125	.625
K20-16	D20-16	1¼	1-5/8-12	1-11½	A	2.078	2.391		1.625	1.313	.750
K20-20	D20-20			1¼-11½	B		2.141				
K24-20	D24-20	1½	1-7/8-12	1¼-11½	A	2.344	2.516		1.875	1.438	.875
K28-24	D28-24	1¾	2-1/4-12	1½-11½		2.828	2.799	.188	2.250	1.625	1.063
K32-32	D32-32	2	2-1/2-12	2-11½		3.078	3.016	.250	2.563	1.875	1.188

MATERIAL: SEE PROCUREMENT SPECIFICATION.
ALUMINUM ALLOY, 2014-T6, CODE "D"
CORROSION RESISTANT STEEL (CLASS 316), CODE "K" (WAS CODE "C")

FINISH: SEE PROCUREMENT SPECIFICATION.

SCREW THREAD: SEE PROCUREMENT SPECIFICATION.

NOTES:
1. REMOVE BURRS AND SLIVERS. BREAK SHARP EDGES UNLESS OTHERWISE NOTED.
2. DIMENSIONS IN INCHES. UNLESS OTHERWISE SPECIFIED, TOLERANCE DECIMALS ±.016.
3. FOR DESIGN FEATURE PURPOSES, THIS DRAWING TAKES PRECEDENCE OVER PROCUREMENT DOCUMENTS REFERENCED HEREIN.
4. REFERENCED DOCUMENTS SHALL BE OF THE ISSUE IN EFFECT ON THE DATE OF INVITATION FOR BID.
5. MARKING OF FITTINGS SHALL BE CONSISTENT WITH PROCUREMENT SPECIFICATION USING APPLICABLE KC STANDARD AND PART NUMBER DESIGNATIONS AS SHOWN ON THIS DRAWING.

6 AT THE OPTION OF THE MANUFACTURER, THE SMALLER DIAMETER MAY BE DRILLED THROUGH THE FITTING FROM PORT TO PORT OR CENTERLINE OF RUN.

7 TOLERANCE UP TO AND INCLUDING -6 SIZE ±2-1/2° ABOVE -6 SIZE ±1-1/2°.

EXAMPLE OF PART NOS.
KC121K8-6 = TEE, ½" OD TUBING AND ⅜" PIPE THREAD, CORROSION RESISTANT STEEL
KC121D8-6 = TEE, ½" OD TUBING AND ⅜" PIPE THREAD, ALUMINUM ALLOY

REVISED: (E) REV & REDRAWN 8-1-90

APPROVED: 5-10-65

CUSTODIAN: JOHN F. KENNEDY SPACE CENTER

PROCUREMENT SPEC. KSC-F-124

COORDINATION STATUS KSC DE

TEE - FLARED TUBE WITH PIPE THREAD ON RUN, FOR SEAL RING

STANDARD PART KC121

SHEET 1 OF 1

KSC FORM 32-85 (CG 4/92)

NOTICE: WHEN GOVERNMENT DRAWINGS, SPECIFICATIONS OR OTHER DATA ARE USED FOR ANY PURPOSE OTHER THAN IN CONNECTION WITH A DEFINITELY RELATED GOVERNMENT PROCUREMENT OPERATION, THE UNITED STATES GOVERNMENT THEREBY INCURS NO RESPONSIBILITY NOR ANY OBLIGATION WHATSOEVER AND THE FACT THAT THE GOVERNMENT MAY HAVE FORMULATED, FURNISHED, OR IN ANY WAY SUPPLIED THE SAID DRAWINGS, SPECIFICATIONS, OR OTHER DATA IS NOT REGARDED BY IMPLICATION OR OTHERWISE AS IN ANY MANNER LICENSING THE HOLDER OR ANY OTHER PERSON OR CORPORATION, OR CONVEYING ANY RIGHTS OR PERMISSION TO MANUFACTURE, USE, OR SELL ANY PATENTED INVENTION THAT MAY IN ANY WAY BE RELATED THERETO.

FED SUP CLASS
4730

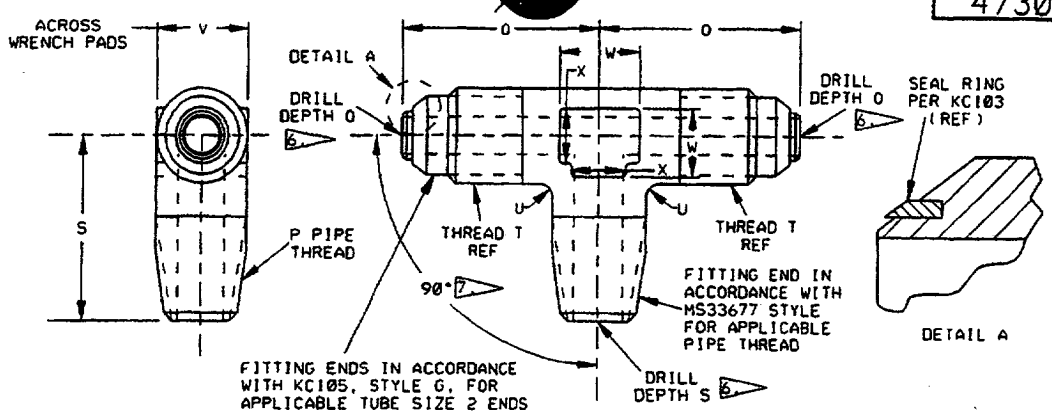

DASH NO. CRES STEEL	DASH NO. AL ALLOY	TUBE OD REF	THREAD T REF	PIPE THREAD END THREAD P ANPT	PIPE THREAD END MS33677 STYLE	6 O +.000 -.047	6 S +.000 -.047	U RAD	V	W APPROX	X APPROX
K4-2	D4-2	¼	7/16-20	1/8-27	A	.906	.797	.063	.438	.375	.250
K6-4	D6-4	⅜	9/16-18	1/4-18		1.078	1.109	.094	.563	.562	.313 .313
K8-6	D8-6	½	3/4-16	3/8-18		1.266	1.234		.750	.688	
K10-8	D10-8	⅝	7/8-14	1/2-14		1.469	1.484		.875	.750	.438
K12-12	D12-12	¾	1-1/16-12	3/4-14		1.672	1.609		1.063	.875	
K16-12	D16-12	1	1-5/16-12	3/4-14		1.828	1.734		1.313	1.063	.500
K16-16	D16-16			1-11½	B		1.984	.125		1.125	.625
K20-16	D20-16	1¼	1-5/8-12	1-11½	A	2.078	2.391		1.625	1.313	.750
K20-20	D20-20			1¼-11½	B		2.141				
K24-20	D24-20	1½	1-7/8-12	1¼-11½	A	2.344	2.516		1.875	1.438	.875
K28-24	D28-24	1¾	2-1/4-12	1½-11½		2.828	2.799	.188	2.250	1.625	1.063
K32-32	D32-32	2	2-1/2-12	2-11½		3.078	3.016	.250	2.563	1.875	1.188

MATERIAL: SEE PROCUREMENT SPECIFICATION.
ALUMINUM ALLOY, 2014-T6, CODE "D"
CORROSION RESISTANT STEEL (CLASS 316), CODE "K" (WAS CODE "C")

FINISH: SEE PROCUREMENT SPECIFICATION.

SCREW THREAD: SEE PROCUREMENT SPECIFICATION.

NOTES:
1. REMOVE BURRS AND SLIVERS. BREAK SHARP EDGES UNLESS OTHERWISE NOTED.
2. DIMENSIONS IN INCHES. UNLESS OTHERWISE SPECIFIED, TOLERANCE DECIMALS ±.016.
3. FOR DESIGN FEATURE PURPOSES, THIS DRAWING TAKES PRECEDENCE OVER PROCUREMENT DOCUMENTS REFERENCED HEREIN.
4. REFERENCED DOCUMENTS SHALL BE OF THE ISSUE IN EFFECT ON THE DATE OF INVITATION FOR BID.
5. MARKING OF FITTINGS SHALL BE CONSISTENT WITH PROCUREMENT SPECIFICATION USING APPLICABLE KC STANDARD AND PART NUMBER DESIGNATIONS AS SHOWN ON THIS DRAWING.

6. AT THE OPTION OF THE MANUFACTURER, THE SMALLER DIAMETER MAY BE DRILLED THROUGH THE FITTING FROM PORT TO PORT OR CENTERLINE OF RUN.

7. TOLERANCE UP TO AND INCLUDING -6 SIZE ±2-1/2° ABOVE -6 SIZE ±1-1/2°.

EXAMPLE OF PART NOS.
KC122K8-6 = TEE, ½" OD TUBING AND ⅜" PIPE THREAD, CORROSION RESISTANT STEEL
KC122D8-6 = TEE, ½" OD TUBING AND ⅜" PIPE THREAD, ALUMINUM ALLOY

REVISED: Ⓓ REV & REDRAWN 8-1-90
APPROVED: 5-10-65

CUSTODIAN: JOHN F. KENNEDY SPACE CENTER

PROCUREMENT SPEC. KSC-F-124

COORDINATION STATUS KSC DE

TEE - FLARED TUBE WITH PIPE THREAD ON SIDE, FOR SEAL RING

STANDARD PART
KC122
SHEET 1 OF 1

KSC FORM 32-85 (CG 4/92)

NOTICE: WHEN GOVERNMENT DRAWINGS, SPECIFICATIONS OR OTHER DATA ARE USED FOR ANY PURPOSE OTHER THAN IN CONNECTION WITH A DEFINITELY RELATED GOVERNMENT PROCUREMENT OPERATION, THE UNITED STATES GOVERNMENT THEREBY INCURS NO RESPONSIBILITY NOR ANY OBLIGATION WHATSOEVER AND THE FACT THAT THE GOVERNMENT MAY HAVE FORMULATED, FURNISHED, OR IN ANY WAY SUPPLIED THE SAID DRAWINGS, SPECIFICATIONS, OR OTHER DATA IS NOT REGARDED BY IMPLICATION OR OTHERWISE AS IN ANY MANNER LICENSING THE HOLDER OR ANY OTHER PERSON OR CORPORATION, OR CONVEYING ANY RIGHTS OR PERMISSION TO MANUFACTURE, USE, OR SELL ANY PATENTED INVENTION THAT MAY IN ANY WAY BE RELATED THERETO.

FED SUP CLASS
4730

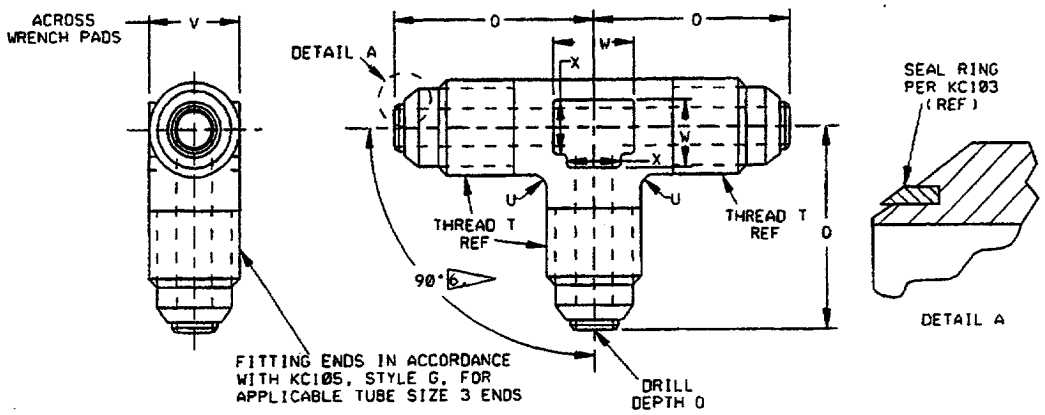

DASH NO. CRE STEEL	DASH NO. AL ALLOY	TUBE OD REF	THREAD T REF	O +.000 -.047	U RAD	V	W APPROX	X APPROX
K4	D4	¼	7/16-20	.906	.063	.438	.375	.250
K6	D6	⅜	9/16-18	1.078	.094	.563	.500	.313
K8	D8	½	3/4-16	1.266		.750	.688	.438
K10	D10	⅝	7/8-14	1.469	.125	.875	.781	.438
K12	D12	¾	1-1/16-12	1.672		1.063	.906	.500
K16	D16	1	1-5/16-12	1.828		1.313	1.094	.625
K20	D20	1¼	1-5/8-12	2.078		1.625	1.313	.750
K24	D24	1½	1-7/8-12	2.344		1.875	1.500	.875
K28	D28	1¾	2-1/4-12	2.828		2.250	1.781	1.063
K32	D32	2	2-1/2-12	3.078	.188	2.563	2.031	1.188

MATERIAL: SEE PROCUREMENT SPECIFICATION.
ALUMINUM ALLOY, 2014-T6, CODE "D"
CORROSION RESISTANT STEEL (CLASS 316), CODE "K" (WAS CODE "C")

FINISH: SEE PROCUREMENT SPECIFICATION.

SCREW THREAD: SEE PROCUREMENT SPECIFICATION.

NOTES:
1. REMOVE BURRS AND SLIVERS. BREAK SHARP EDGES UNLESS OTHERWISE NOTED.
2. DIMENSIONS IN INCHES. UNLESS OTHERWISE SPECIFIED, TOLERANCE DECIMALS ±.016.
3. FOR DESIGN FEATURE PURPOSES, THIS DRAWING TAKES PRECEDENCE OVER PROCUREMENT DOCUMENTS REFERENCED HEREIN.
4. REFERENCED DOCUMENTS SHALL BE OF THE ISSUE IN EFFECT ON THE DATE OF INVITATION FOR BID.
5. MARKING OF FITTINGS SHALL BE CONSISTENT WITH PROCUREMENT SPECIFICATION USING APPLICABLE KC STANDARD AND PART NUMBER DESIGNATIONS AS SHOWN ON THIS DRAWING.

6 TOLERANCE UP TO AND INCLUDING -6 SIZE ±2-1/2° ABOVE -6 SIZE ±1-1/2°.

EXAMPLE OF PART NOS.
KC123K8 = TEE, ½" OD TUBING, CORROSION RESISTANT STEEL
KC123D12 = TEE, ¾" OD TUBING, ALUMINUM ALLOY

REVISED: D REV & REDRAWN 8-1-90
APPROVED: 5-10-65

CUSTODIAN: JOHN F. KENNEDY SPACE CENTER

PROCUREMENT SPEC. KSC-F-124

COORDINATION STATUS KSC DE

TEE - FLARED TUBE FOR SEAL RING

STANDARD PART
KC123

SHEET 1 OF 1

KSC FORM 32-85 (CG 4/92)

FED SUP CLASS 4730

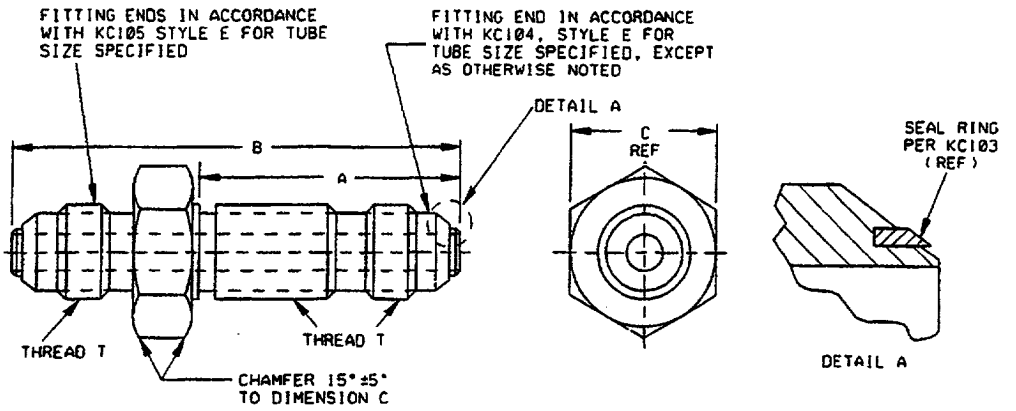

DASH NO. CRE STEEL	DASH NO. AL ALLOY	TUBE OD REF	THREAD T REF	A +.000 -.045	B +.000 -.090	C REF
K4	D4	¼	7/16-20	1.219	2.062	.688
K6	D6	⅜	9/16-18	1.297	2.234	.813
K8	D8	½	3/4-16	1.453	2.469	1.000
K10	D10	⅝	7/8-14	1.594	2.734	1.125
K12	D12	¾	1-1/16-12	1.766	3.047	1.375
K16	D16	1	1-5/16-12	1.766	3.094	1.625
K20	D20	1¼	1-5/8-12	1.812	3.172	1.875
K24	D24	1½	1-7/8-12	1.828	3.328	2.125
K28	D28	1¾	2-1/4-12	1.984	3.594	2.500
K32	D32	2	2-1/2-12	2.110	3.844	2.750

MATERIAL: SEE PROCUREMENT SPECIFICATION.
ALUMINUM ALLOY, 2024-T6, CODE "D"
CORROSION RESISTANT STEEL (CLASS 316), CODE "K" (WAS CODE "C")

FINISH: SEE PROCUREMENT SPECIFICATION.

SCREW THREAD: SEE PROCUREMENT SPECIFICATION.

NOTES:
1. REMOVE BURRS AND SLIVERS. BREAK SHARP EDGES UNLESS OTHERWISE NOTED.
2. DIMENSIONS IN INCHES. UNLESS OTHERWISE SPECIFIED, TOLERANCE DECIMALS ±.016.
3. FOR DESIGN FEATURE PURPOSES, THIS DRAWING TAKES PRECEDENCE OVER PROCUREMENT DOCUMENTS REFERENCED HEREIN.
4. REFERENCED DOCUMENTS SHALL BE OF THE ISSUE IN EFFECT ON THE DATE OF INVITATION FOR BID.
5. MARKING OF FITTINGS SHALL BE CONSISTENT WITH PROCUREMENT SPECIFICATION USING APPLICABLE KC STANDARD AND PART NUMBER DESIGNATIONS AS SHOWN ON THIS DRAWING.

EXAMPLE OF PART NOS.
KC124K4 = UNION, ⅜" BULKHEAD, ¼ OD TUBING, CORROSION RESISTANT STEEL
KC124D8 = UNION, ⅜" BULKHEAD, ½ OD TUBING, ALUMINUM ALLOY

APPROVED: 5-10-65 REVISED: Ⓖ REV & REDRAWN 8-1-90

CUSTODIAN: JOHN F. KENNEDY SPACE CENTER

PROCUREMENT SPEC. KSC-F-124

COORDINATION STATUS KSC DE

UNION, FLARED TUBE ⅜" BULKHEAD AND UNIVERSAL FOR SEAL RING

STANDARD PART

KC124

SHEET 1 OF 1

KSC FORM 32-85 (CG 4/92)

NOTICE: WHEN GOVERNMENT DRAWINGS, SPECIFICATIONS OR OTHER DATA ARE USED FOR ANY PURPOSE OTHER THAN IN CONNECTION WITH A DEFINITELY RELATED GOVERNMENT PROCUREMENT OPERATION, THE UNITED STATES GOVERNMENT THEREBY INCURS NO RESPONSIBILITY NOR ANY OBLIGATION WHATSOEVER AND THE FACT THAT THE GOVERNMENT MAY HAVE FORMULATED, FURNISHED, OR IN ANY WAY SUPPLIED THE SAID DRAWINGS, SPECIFICATIONS, OR OTHER DATA IS NOT REGARDED BY IMPLICATION OR OTHERWISE AS IN ANY MANNER LICENSING THE HOLDER OR ANY OTHER PERSON OR CORPORATION, OR CONVEYING ANY RIGHTS OR PERMISSION TO MANUFACTURE, USE, OR SELL ANY PATENTED INVENTION THAT MAY IN ANY WAY BE RELATED THERETO.

FED SUP CLASS
4730

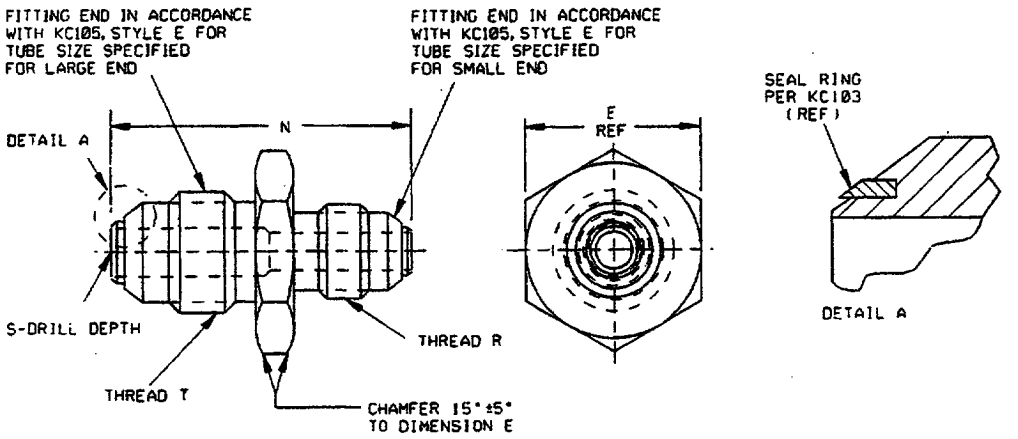

MATERIAL: SEE PROCUREMENT SPECIFICATION.
ALUMINUM ALLOY, 2024-T6, CODE "D"
CORROSION RESISTANT STEEL (CLASS 316), CODE "K" (WAS CODE "C")

FINISH: SEE PROCUREMENT SPECIFICATION.

SCREW THREAD: SEE PROCUREMENT SPECIFICATION.

NOTES:

1. REMOVE BURRS AND SLIVERS. BREAK SHARP EDGES UNLESS OTHERWISE NOTED.
2. DIMENSIONS IN INCHES. UNLESS OTHERWISE SPECIFIED, TOLERANCE DECIMALS ±.016.
3. FOR DESIGN FEATURE PURPOSES, THIS DRAWING TAKES PRECEDENCE OVER PROCUREMENT DOCUMENTS REFERENCED HEREIN.
4. REFERENCED DOCUMENTS SHALL BE OF THE ISSUE IN EFFECT ON THE DATE OF INVITATION FOR BID.
5. MARKING OF FITTINGS SHALL BE CONSISTENT WITH PROCUREMENT SPECIFICATION USING APPLICABLE KC STANDARD AND PART NUMBER DESIGNATIONS AS SHOWN ON THIS DRAWING.
6. AT THE OPTION OF THE MANUFACTURER, THE SMALLER INSIDE DIAMETER DIMENSION MAY BE DRILLED FROM PORT TO PORT.

EXAMPLE OF PART NOS.
KC125K8-4 = REDUCER, ½ OD TO ¼ OD TUBING, CORROSION RESISTANT STEEL
KC125D8-4 = REDUCER, ½ OD TO ¼ OD TUBING, ALUMINUM ALLOY

REVISED: (F) REV & REDRAWN 8-1-90

APPROVED: 8-12-65

CUSTODIAN: JOHN F. KENNEDY SPACE CENTER

PROCUREMENT SPEC. KSC-F-124

COORDINATION STATUS KSC DE

REDUCER - EXTERNAL THREAD FLARED TUBE FOR SEAL RING

STANDARD PART

KC125

SHEET 1 OF 2

KSC FORM 32-85 (CG 4/92)

NOTICE: WHEN GOVERNMENT DRAWINGS, SPECIFICATIONS OR OTHER DATA ARE USED FOR ANY PURPOSE OTHER THAN IN CONNECTION WITH A DEFINITELY RELATED GOVERNMENT PROCUREMENT OPERATION, THE UNITED STATES GOVERNMENT THEREBY INCURS NO RESPONSIBILITY NOR ANY OBLIGATION WHATSOEVER AND THE FACT THAT THE GOVERNMENT MAY HAVE FORMULATED, FURNISHED, OR IN ANY WAY SUPPLIED THE SAID DRAWINGS, SPECIFICATIONS, OR OTHER DATA IS NOT REGARDED BY IMPLICATION OR OTHERWISE AS IN ANY MANNER LICENSING THE HOLDER OR ANY OTHER PERSON OR CORPORATION, OR CONVEYING ANY RIGHTS OR PERMISSION TO MANUFACTURE, USE, OR SELL ANY PATENTED INVENTION THAT MAY IN ANY WAY BE RELATED THERETO.

FED SUP CLASS
4730

DASH NO.		LARGE END		SMALL END		S MAX	N +.000 -.090	E REF
CRES STEEL	AL ALLOY	TUBE OD REF	THREAD T REF	TUBE OD REF	THREAD R REF			
K6-4	D6-4	3/8	9/16-18	1/4	7/16-20	.457	1.422	.813
K8-4	D8-4	1/2	3/4-16	1/4	7/16-20	.538	1.547	1.000
K8-6	D8-6			3/8	9/16-18			
K10-4	D10-4	5/8	7/8-14	1/4	7/16-20	.618	1.672	1.125
K10-6	D10-6			3/8	9/16-18			
K10-8	D10-8			1/2	3/4-16		1.766	
K12-4	D12-4	3/4	1-1/16-12	1/4	7/16-20	.703	1.813	1.375
K12-6	D12-6			3/8	9/16-18			
K12-8	D12-8			1/2	3/4-16		1.907	
K12-10	D12-10			5/8	7/8-14		2.016	
K16-4	D16-4	1	1-5/16-12	1/4	7/16-20	.741	1.860	1.625
K16-8	D16-8			1/2	3/4-16		2.172	
K16-10	D16-10			5/8	7/8-14		2.063	
K16-12	D16-12			3/4	1-1/16-12		2.172	
K20-4	D20-4	1 1/4	1-5/8-12	1/4	7/16-20	.778	1.907	1.875
K20-12	D20-12			3/4	1-1/16-12		2.266	
K20-16	D20-16			1	1-5/16-12			
K24-16	D24-16	1 1/2	1-7/8-12			.878	2.375	2.125
K24-20	D24-20			1-1/4	1-5/8-12		2.422	
K28-20	D28-20	1 3/4	2-1/4-12			.978	2.598	2.500
K28-24	D28-24			1-1/2	1-7/8-12		2.723	
K32-24	D32-24	2	2-1/2-12			1.078	2.848	2.750
K32-28	D32-28			1-3/4	2-1/4-12		2.973	

REVISED: (F) REV & REDRAWN 8-1-90

APPROVED: 8-12-65

CUSTODIAN: JOHN F. KENNEDY SPACE CENTER

PROCUREMENT SPEC. KSC-F-124

COORDINATION STATUS KSC DE

REDUCER - EXTERNAL THREAD FLARED TUBE FOR SEAL RING

STANDARD PART

KC125

SHEET 2 OF 2

KSC FORM 32-85 (CG 4/92)

NOTICE: WHEN GOVERNMENT DRAWINGS, SPECIFICATIONS OR OTHER DATA ARE USED FOR ANY PURPOSE OTHER THAN IN CONNECTION WITH A DEFINITELY RELATED GOVERNMENT PROCUREMENT OPERATION, THE UNITED STATES GOVERNMENT THEREBY INCURS NO RESPONSIBILITY NOR ANY OBLIGATION WHATSOEVER AND THE FACT THAT THE GOVERNMENT MAY HAVE FORMULATED, FURNISHED, OR IN ANY WAY SUPPLIED THE SAID DRAWINGS, SPECIFICATIONS, OR OTHER DATA IS NOT REGARDED BY IMPLICATION OR OTHERWISE AS IN ANY MANNER LICENSING THE HOLDER OR ANY OTHER PERSON OR CORPORATION, OR CONVEYING ANY RIGHTS OR PERMISSION TO MANUFACTURE, USE, OR SELL ANY PATENTED INVENTION THAT MAY IN ANY WAY BE RELATED THERETO.

NOTICE: WHEN GOVERNMENT DRAWINGS, SPECIFICATIONS OR OTHER DATA ARE USED FOR ANY PURPOSE OTHER THAN IN CONNECTION WITH A DEFINITELY RELATED GOVERNMENT PROCUREMENT OPERATION, THE UNITED STATES GOVERNMENT THEREBY INCURS NO RESPONSIBILITY NOR ANY OBLIGATION WHATSOEVER AND THE FACT THAT THE GOVERNMENT MAY HAVE FORMULATED, FURNISHED, OR IN ANY WAY SUPPLIED THE SAID DRAWINGS, SPECIFICATIONS, OR OTHER DATA IS NOT REGARDED BY IMPLICATION OR OTHERWISE AS IN ANY MANNER LICENSING THE HOLDER OR ANY OTHER PERSON OR CORPORATION, OR CONVEYING ANY RIGHTS OR PERMISSION TO MANUFACTURE, USE, OR SELL ANY PATENTED INVENTION THAT MAY IN ANY WAY BE RELATED THERETO.

FED SUP CLASS
4730

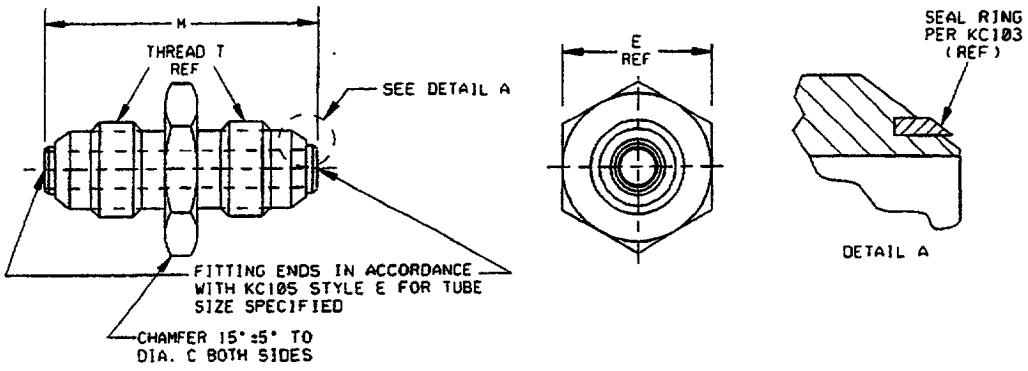

DASH NO.		TUBE OD REF	THREAD T REF	M +.000 -.090	E REF
CRE STEEL	AL ALLOY				
K4	D4	¼	7/16-20	1.266	.688
K6	D6	⅜	9/16-18	1.391	.813
K8	D8	½	3/4-16	1.578	1.000
K10	D10	⅝	7/8-14	1.844	1.125
K12	D12	¾	1-1/16-12	2.125	1.375
K16	D16	1	1-5/16-12	2.203	1.625
K20	D20	1¼	1-5/8-12	2.297	1.875
K24	D24	1½	1-7/8-12	2.547	2.125
K28	D28	1¾	2-1/4-12	2.828	2.500
K32	D32	2	2-1/2-12	3.078	2.750

MATERIAL: SEE PROCUREMENT SPECIFICATION.
ALUMINUM ALLOY, 2024-T6, CODE "D"
CORROSION RESISTANT STEEL (CLASS 316), CODE "K" (WAS CODE "C")

FINISH: SEE PROCUREMENT SPECIFICATION.

SCREW THREAD: SEE PROCUREMENT SPECIFICATION.

NOTES:
1. REMOVE BURRS AND SLIVERS. BREAK SHARP EDGES UNLESS OTHERWISE NOTED.
2. DIMENSIONS IN INCHES. UNLESS OTHERWISE SPECIFIED, TOLERANCE DECIMALS ±.016.
3. FOR DESIGN FEATURE PURPOSES, THIS DRAWING TAKES PRECEDENCE OVER PROCUREMENT DOCUMENTS REFERENCED HEREIN.
4. REFERENCED DOCUMENTS SHALL BE OF THE ISSUE IN EFFECT ON THE DATE OF INVITATION FOR BID.
5. MARKING OF FITTINGS SHALL BE CONSISTENT WITH PROCUREMENT SPECIFICATION USING APPLICABLE KC STANDARD AND PART NUMBER DESIGNATIONS AS SHOWN ON THIS DRAWING.

EXAMPLE OF PART NOS.
KC126K8 = UNION, ½" OD TUBING, CORROSION RESISTANT STEEL
KC126D12 = UNION, ¾" OD TUBING, ALUMINUM ALLOY

REVISED: (D) REV & REDRAWN 8-1-90
APPROVED: 5-10-65

CUSTODIAN: JOHN F. KENNEDY SPACE CENTER		
PROCUREMENT SPEC. KSC-F-124	UNION, FLARED TUBE FOR SEAL RING	STANDARD PART
COORDINATION STATUS KSC DE		KC126
		SHEET 1 OF 1

KSC FORM 32-85 (CG 4/92)

FED SUP CLASS
4730

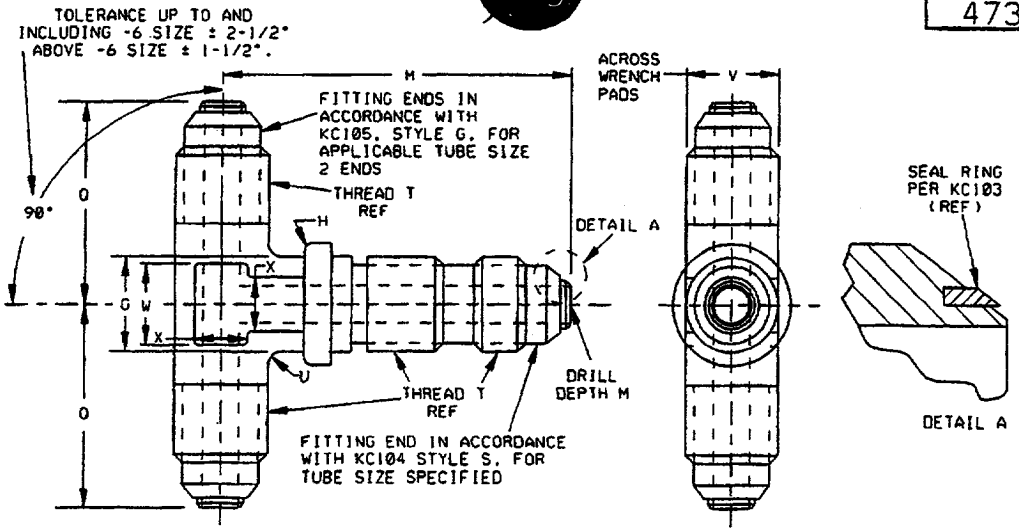

DASH NO. CRE STEEL	DASH NO. AL ALLOY	TUBE OD REF	THREAD T REF	G DIA	H RAD	M +.000 -.047	O +.000 -.047	U RAD	V	W APPROX	X APPROX
K4	D4	¼	7/16-20	.438	.063	1.625	1.000	.063	.438	.375	.250
K6	D6	⅜	9/16-18	.563		1.844	1.125	.094	.563	.500	.313
K8	D8	½	3/4-16	.750		2.141	1.391		.750	.625	.438
K10	D10	⅝	7/8-14	.875		2.422	1.594		.875	.750	.438
K12	D12	¾	1-1/16-12	1.063		2.703	1.813	.125	1.063	.875	.500
K16	D16	1	1-5/16-12	1.313	.094	2.828	1.969		1.313	1.063	.625
K20	D20	1¼	1-5/8-12	1.625		3.156	2.203		1.625	1.250	.750
K24	D24	1½	1-7/8-12	1.875		3.453	2.375	.188	1.875	1.438	.875
K28	D28	1¾	2-1/4-12	2.250		3.828	2.641		2.250	1.750	1.063
K32	D32	2	2-1/2-12	2.563		4.141	2.922		2.563	1.938	1.188

MATERIAL: SEE PROCUREMENT SPECIFICATION.
ALUMINUM ALLOY, 2014-T6, CODE "D"
CORROSION RESISTANT STEEL (CLASS 316), CODE "K" (WAS CODE "C")

FINISH: SEE PROCUREMENT SPECIFICATION.

SCREW THREAD: SEE PROCUREMENT SPECIFICATION.

NOTES:
1. REMOVE BURRS AND SLIVERS. BREAK SHARP EDGES UNLESS OTHERWISE NOTED.
2. DIMENSIONS IN INCHES. UNLESS OTHERWISE SPECIFIED, TOLERANCE DECIMALS ±.016.
3. FOR DESIGN FEATURE PURPOSES, THIS DRAWING TAKES PRECEDENCE OVER PROCUREMENT DOCUMENTS REFERENCED HEREIN.
4. REFERENCED DOCUMENTS SHALL BE OF THE ISSUE IN EFFECT ON THE DATE OF INVITATION FOR BID.
5. MARKING OF FITTINGS SHALL BE CONSISTENT WITH PROCUREMENT SPECIFICATION USING APPLICABLE KC STANDARD AND PART NUMBER DESIGNATIONS AS SHOWN ON THIS DRAWING.
6. WHEN USED AGAINST BULKHEAD USE WASHER AN960 TO FORM BACKING FACE.

EXAMPLE OF PART NOS.
KC127K8 = TEE, BULKHEAD ON LEG, ½" OD TUBING, CORROSION RESISTANT STEEL
KC127D12 = TEE, BULKHEAD ON LEG, ¾" OD TUBING, ALUMINUM ALLOY

REVISED: (E) REF & REDRAWN 8-1-90

APPROVED: 5-10-65

CUSTODIAN: JOHN F. KENNEDY SPACE CENTER

PROCUREMENT SPEC. KSC-F-124

COORDINATION STATUS KSC DE

TEE - FLARED TUBE & BULKHEAD UNIVERSAL ON SIDE FOR SEAL RING

STANDARD PART

KC127

SHEET 1 OF 1

KSC FORM 32-85 (CG 4/92)

NOTICE: WHEN GOVERNMENT DRAWINGS, SPECIFICATIONS OR OTHER DATA ARE USED FOR ANY PURPOSE OTHER THAN IN CONNECTION WITH A DEFINITELY RELATED GOVERNMENT PROCUREMENT OPERATION, THE UNITED STATES GOVERNMENT THEREBY INCURS NO RESPONSIBILITY NOR ANY OBLIGATION WHATSOEVER AND THE FACT THAT THE GOVERNMENT MAY HAVE FORMULATED, FURNISHED, OR IN ANY WAY SUPPLIED THE SAID DRAWINGS, SPECIFICATIONS, OR OTHER DATA IS NOT REGARDED BY IMPLICATION OR OTHERWISE AS IN ANY MANNER LICENSING THE HOLDER OR ANY OTHER PERSON OR CORPORATION, OR CONVEYING ANY RIGHTS OR PERMISSION TO MANUFACTURE, USE, OR SELL ANY PATENTED INVENTION THAT MAY IN ANY WAY BE RELATED THERETO.

NOTICE: WHEN GOVERNMENT DRAWINGS, SPECIFICATIONS OR OTHER DATA ARE USED FOR ANY PURPOSE OTHER THAN IN CONNECTION WITH A DEFINITELY RELATED GOVERNMENT PROCUREMENT OPERATION, THE UNITED STATES GOVERNMENT THEREBY INCURS NO RESPONSIBILITY NOR ANY OBLIGATION WHATSOEVER AND THE FACT THAT THE GOVERNMENT MAY HAVE FORMULATED, FURNISHED, OR IN ANY WAY SUPPLIED THE SAID DRAWINGS, SPECIFICATIONS, OR OTHER DATA IS NOT REGARDED BY IMPLICATION OR OTHERWISE AS IN ANY MANNER LICENSING THE HOLDER OR ANY OTHER PERSON OR CORPORATION, OR CONVEYING ANY RIGHTS OR PERMISSION TO MANUFACTURE, USE, OR SELL ANY PATENTED INVENTION THAT MAY IN ANY WAY BE RELATED THERETO.

FED SUP CLASS
4730

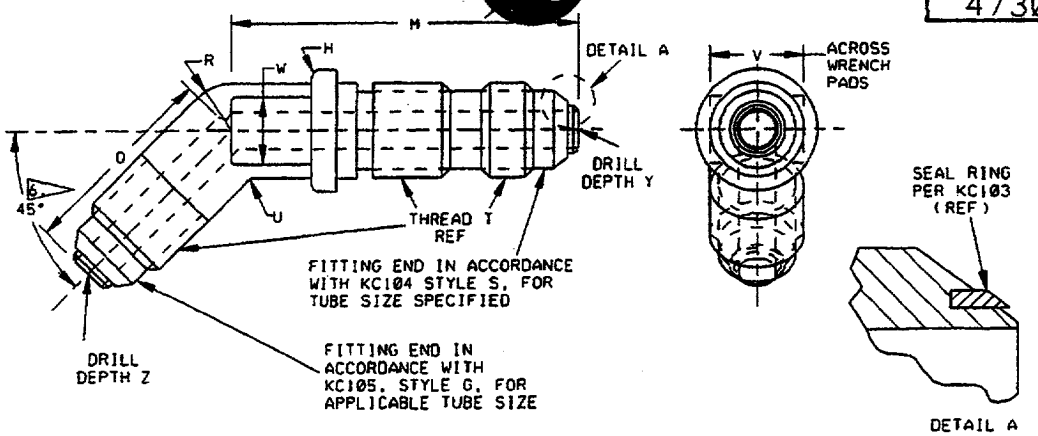

DASH NO. CRE STEEL	DASH NO. AL ALLOY	TUBE OD REF	THREAD T REF	H RAD	M +.000 -.063	D +.000 -.063	R RAD	U RAD	V	W APPROX	Y +.047 -.000	Z +.047 -.000
K4	D4	¼	7/16-20	.063	1.578	.750	.219	.063	.438	.313	1.594	.766
K6	D6	⅜	9/16-18		1.719	.860	.261	.094	.563	.375	1.750	.891
K8	D8	½	3/4-16		1.985	1.016	.375		.750	.500	2.031	1.063
K10	D10	⅝	7/8-14		2.219	1.141	.438		.875	.625	2.281	1.203
K12	D12	¾	1-1/16-12		2.485	1.313	.531		1.063	.813	2.563	1.391
K16	D16	1	1-5/16-12	.094	2.610	1.500	.656	.125	1.313	1.000	2.734	1.625
K20	D20	1¼	1-5/8-12		2.703	1.625	.813		1.625	1.250	2.875	1.797
K24	D24	1½	1-7/8-12		2.719	1.813	.938		1.875	1.500	2.938	2.031
K28	D28	1¾	2-1/4-12		2.797	2.000	1.125	.188	2.250	1.750	3.078	2.266
K32	D32	2	2-1/2-12		2.953	2.250	1.250	.250	2.563	2.000	3.031	2.578

MATERIAL: SEE PROCUREMENT SPECIFICATION.
ALUMINUM ALLOY, 2014-T6, CODE "D"
CORROSION RESISTANT STEEL (CLASS 316), CODE "K" (WAS CODE "C")

FINISH: SEE PROCUREMENT SPECIFICATION.

SCREW THREAD: SEE PROCUREMENT SPECIFICATION.

NOTES:
1. REMOVE BURRS AND SLIVERS. BREAK SHARP EDGES UNLESS OTHERWISE NOTED.
2. DIMENSIONS IN INCHES. UNLESS OTHERWISE SPECIFIED, TOLERANCE DECIMALS ±.016.
3. FOR DESIGN FEATURE PURPOSES. THIS DRAWING TAKES PRECEDENCE OVER PROCUREMENT DOCUMENTS REFERENCED HEREIN.
4. REFERENCED DOCUMENTS SHALL BE OF THE ISSUE IN EFFECT ON THE DATE OF INVITATION FOR BID.
5. MARKING OF FITTINGS SHALL BE CONSISTENT WITH PROCUREMENT SPECIFICATION USING APPLICABLE KC STANDARD AND PART NUMBER DESIGNATIONS AS SHOWN ON THIS DRAWING.

6. TOLERANCE UP TO AND INCLUDING -6 SIZE ±2-1/2° ABOVE -6 SIZE ±1-1/2°.

EXAMPLE OF PART NOS.
KC128K8 = ELBOW, ½" OD TUBING, CORROSION RESISTANT STEEL
KC128D12 = ELBOW, ¾" OD TUBING, ALUMINUM ALLOY

REVISED: (E) REV & REDRAWN 8-1-90

APPROVED: 5-10-65

CUSTODIAN: JOHN F. KENNEDY SPACE CENTER

PROCUREMENT SPEC. KSC-F-124

COORDINATION STATUS KSC DE

ELBOW - FLARED TUBE BULKHEAD UNIVERSAL, 45°, FOR SEAL RING

STANDARD PART KC128

SHEET 1 OF 1

KSC FORM 32-85 (CG 4/92)

NOTICE: WHEN GOVERNMENT DRAWINGS, SPECIFICATIONS OR OTHER DATA ARE USED FOR ANY PURPOSE OTHER THAN IN CONNECTION WITH A DEFINITELY RELATED GOVERNMENT PROCUREMENT OPERATION, THE UNITED STATES GOVERNMENT THEREBY INCURS NO RESPONSIBILITY NOR ANY OBLIGATION WHATSOEVER AND THE FACT THAT THE GOVERNMENT MAY HAVE FORMULATED, FURNISHED, OR IN ANY WAY SUPPLIED THE SAID DRAWINGS, SPECIFICATIONS, OR OTHER DATA IS NOT REGARDED BY IMPLICATION OR OTHERWISE AS IN ANY MANNER LICENSING THE HOLDER OR ANY OTHER PERSON OR CORPORATION, OR CONVEYING ANY RIGHTS OR PERMISSION TO MANUFACTURE, USE, OR SELL ANY PATENTED INVENTION THAT MAY IN ANY WAY BE RELATED THERETO.

FED SUP CLASS 4730

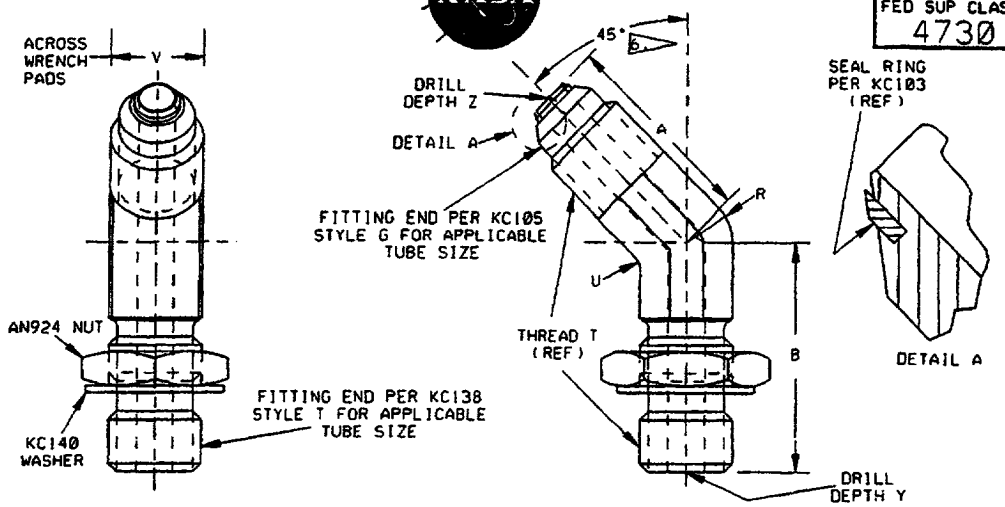

DASH NO. CRE STEEL	DASH NO. AL ALLOY	TUBE OD REF	THREAD T REF	A DIM. +.000 -.063	B DIM. +.000 -.063	U RAD ±.03	R RAD ±.03	F PAD DIM. ±.016	BULKHEAD NUT FOR CRE STEEL ASSY *	BULKHEAD NUT FOR AL ALLOY ASSY	WASHER FOR CRE STEEL ASSY	WASHER FOR AL ALLOY ASSY
K4	D4	¼	7/16-20	.750	1.078	.063	.242	.438	AN924-K4	AN924-D4	KC140C4	KC140D4
K6	D6	⅜	9/16-18	.860	1.172	.094	.317	.563	AN924-K6	AN924-D6	KC140C6	KC140D6
K8	D8	½	3/4-16	1.016	1.328		.414	.750	AN924-K8	AN924-D8	KC140C8	KC140D8
K10	D10	⅝	7/8-14	1.141	1.547	.125	.484	.875	AN924-K10	AN924-D10	KC140C10	KC140D10
K12	D12	¾	1-1/16-12	1.313	1.766		.586	1.063	AN924-K12	AN924-D12	KC140C12	KC140D12
K16	D16	1	1-5/16-12	1.500	1.891		.719	1.313	AN924-K16	AN924-D16	KC140C16	KC140D16
K20	D20	1¼	1-5/8-12	1.625	1.938		.875	1.625	AN924-K20	AN924-D20	KC140C20	KC140D20
K24	D24	1½	1-7/8-12	1.813			1.031	1.875	AN924-K24	AN924-D24	KC140C24	KC140D24
K28	D28	1¾	2-1/4-12	2.000	1.891	.188	1.125	2.250	AN924-K28	AN924-D28	KC140C28	KC140D28
K32	D32	2	2-1/2-12	2.250		.250	1.383	2.500	AN924-K32	AN924-D32	KC140C32	KC140D32

MATERIAL: SEE PROCUREMENT SPECIFICATION.
ALUMINUM ALLOY, 2014-T6, CODE "D"
CORROSION RESISTANT STEEL (CLASS 316), CODE "K" (WAS CODE "C")
*AN924 CRES NUTS MAY BE EITHER 304, CODE "J" OR 316, CODE "K".

FINISH: SEE PROCUREMENT SPECIFICATION.

SCREW THREAD: SEE PROCUREMENT SPECIFICATION.

NOTES:
1. REMOVE BURRS AND SLIVERS. BREAK SHARP EDGES UNLESS OTHERWISE NOTED.
2. DIMENSIONS IN INCHES. UNLESS OTHERWISE SPECIFIED, TOLERANCE DECIMALS ±.016.
3. FOR DESIGN FEATURE PURPOSES, THIS DRAWING TAKES PRECEDENCE OVER PROCUREMENT DOCUMENTS REFERENCED HEREIN.
4. REFERENCED DOCUMENTS SHALL BE OF THE ISSUE IN EFFECT ON THE DATE OF INVITATION FOR BID.
5. MARKING OF FITTINGS SHALL BE CONSISTENT WITH PROCUREMENT SPECIFICATION USING APPLICABLE KC STANDARD AND PART NUMBER DESIGNATIONS AS SHOWN ON THIS DRAWING.

6. TOLERANCE UP TO AND INCLUDING -6 SIZE ± 2-1/2°; ABOVE -6 SIZE ± 1-1/2°.

EXAMPLE OF PART NOS. KC129K8 = 45° ELBOW ASSY, 1/2" OD TUBING, CORROSION RESISTANT STEEL
KC129D12 = 45° ELBOW ASSY, 3/4" OD TUBING, ALUMINUM ALLOY

APPROVED: 5-10-65 REVISED: (E) REV & REDRAWN 8-1-90

CUSTODIAN: JOHN F. KENNEDY SPACE CENTER

PROCUREMENT SPEC. KSC-F-124

COORDINATION STATUS KSC DE

ELBOW ASSY, 45°, FLARED TUBE & MALE ADJUSTABLE END, FOR SEAL RING

STANDARD PART

KC129

SHEET 1 OF 2

KSC FORM 32-85 (CG 4/92)

FED SUP CLASS
4730

DASH NO. CRE STEEL	DASH NO. AL ALLOY	TUBE OD REF	THREAD T REF	Y DIM. +.047 -.000	Z DIM. +.047 -.000
K4	D4	¼	7/16-20	1.094	.766
K6	D6	⅜	9/16-18	1.203	.891
K8	D8	½	3/4-16	1.375	1.063
K10	D10	⅝	7/8-14	1.609	1.203
K12	D12	¾	1-1/16-12	1.844	1.391
K16	D16	1	1-5/16-12	2.016	1.625
K20	D20	1¼	1-5/8-12	2.109	1.797
K24	D24	1½	1-7/8-12	2.156	2.031
K28	D28	1¾	2-1/4-12	2.016	2.266
K32	D32	2	2-1/2-12		2.578

REVISED: (E) REV & REDRAWN 8-1-90

APPROVED: 5-10-65

NOTICE: WHEN GOVERNMENT DRAWINGS, SPECIFICATIONS OR OTHER DATA ARE USED FOR ANY PURPOSE OTHER THAN IN CONNECTION WITH A DEFINATELY RELATED GOVERNMENT PROCUREMENT OPERATION, THE UNITED STATES GOVERNMENT THEREBY INCURS NO RESPONSIBILITY NOR ANY OBLIGATION WHATSOEVER AND THE FACT THAT THE GOVERNMENT MAY HAVE FORMULATED, FURNISHED, OR IN ANY WAY SUPPLIED THE SAID DRAWINGS, SPECIFICATIONS, OR OTHER DATA IS NOT REGARDED BY IMPLICATION OR OTHERWISE AS IN ANY MANNER LICENSING THE HOLDER OR ANY OTHER PERSON OR CORPORATION, OR CONVEYING ANY RIGHTS OR PERMISSION TO MANUFACTURE, USE, OR SELL ANY PATENTED INVENTION THAT MAY IN ANY WAY BE RELATED THERETO.

CUSTODIAN: JOHN F. KENNEDY SPACE CENTER

PROCUREMENT SPEC.
KSC-F-124

COORDINATION STATUS
KSC DE

ELBOW ASSY, 45°, FLARED TUBE & MALE ADJUSTABLE END, FOR SEAL RING

STANDARD PART
KC129

SHEET 2 OF 2

KSC FORM 32-85 (CG 4/92)

NOTICE: WHEN GOVERNMENT DRAWINGS, SPECIFICATIONS OR OTHER DATA ARE USED FOR ANY PURPOSE OTHER THAN IN CONNECTION WITH A DEFINITELY RELATED GOVERNMENT PROCUREMENT OPERATION, THE UNITED STATES GOVERNMENT THEREBY INCURS NO RESPONSIBILITY NOR ANY OBLIGATION WHATSOEVER AND THE FACT THAT THE GOVERNMENT MAY HAVE FORMULATED, FURNISHED, OR IN ANY WAY SUPPLIED THE SAID DRAWINGS, SPECIFICATIONS, OR OTHER DATA IS NOT REGARDED BY IMPLICATION OR OTHERWISE AS IN ANY MANNER LICENSING THE HOLDER OR ANY OTHER PERSON OR CORPORATION, OR CONVEYING ANY RIGHTS OR PERMISSION TO MANUFACTURE, USE, OR SELL ANY PATENTED INVENTION THAT MAY IN ANY WAY BE RELATED THERETO.

FED SUP CLASS 4730

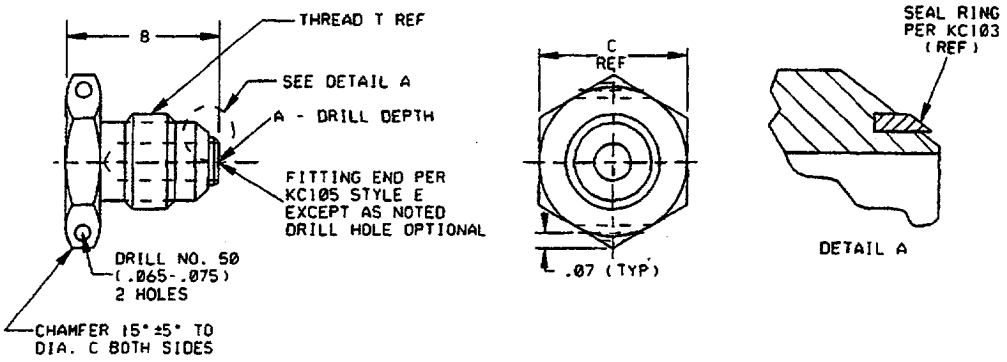

DASH NO. CRE STEEL	DASH NO. AL ALLOY	TUBE OD REF	THREAD T REF	A +.000 -.060	B +.000 -.060	C REF
K4	D4	¼	7/16-20	.531	.750	.688
K6	D6	⅜	9/16-18	.563	.828	.813
K8	D8	½	3/4-16	.625	.953	1.000
K10	D10	⅝	7/8-14	.766	1.125	1.125
K12	D12	¾	1-1/16-12	.813	1.219	1.375
K16	D16	1	1-5/16-12		1.297	1.625
K20	D20	1¼	1-5/8-12	.750	1.375	1.875
K24	D24	1½	1-7/8-12	.813	1.500	2.125
K28	D28	1¾	2-1/4-12	.781	1.625	2.500
K32	D32	2	2-1/2-12	.828	1.750	2.750

MATERIAL: SEE PROCUREMENT SPECIFICATION.
ALUMINUM ALLOY, 2024-T6, CODE "D"
CORROSION RESISTANT STEEL (CLASS 316), CODE "K" (WAS CODE "C")

FINISH: SEE PROCUREMENT SPECIFICATION.

SCREW THREAD: SEE PROCUREMENT SPECIFICATION.

NOTES:
1. REMOVE BURRS AND SLIVERS. BREAK SHARP EDGES UNLESS OTHERWISE NOTED.
2. DIMENSIONS IN INCHES. UNLESS OTHERWISE SPECIFIED, TOLERANCE DECIMALS ±.016.
3. FOR DESIGN FEATURE PURPOSES, THIS DRAWING TAKES PRECEDENCE OVER PROCUREMENT DOCUMENTS REFERENCED HEREIN.
4. REFERENCED DOCUMENTS SHALL BE OF THE ISSUE IN EFFECT ON THE DATE OF INVITATION FOR BID.
5. MARKING OF FITTINGS SHALL BE CONSISTENT WITH PROCUREMENT SPECIFICATION USING APPLICABLE KC STANDARD AND PART NUMBER DESIGNATIONS AS SHOWN ON THIS DRAWING.

EXAMPLE OF PART NOS.
KC130K8 = PLUG, ½" OD TUBING, CORROSION RESISTANT STEEL
KC130D12 = PLUG, ¾" OD TUBING, ALUMINUM ALLOY

APPROVED: 8-12-65 REVISED: (E) REV & REDRAWN 8-1-90

CUSTODIAN: JOHN F. KENNEDY SPACE CENTER

PROCUREMENT SPEC. KSC-F-124

COORDINATION STATUS KSC DE

PLUG, FLARED TUBE FOR SEAL RING

STANDARD PART KC130

SHEET 1 OF 1

KSC FORM 32-85 (CG 4/92)

NOTICE: WHEN GOVERNMENT DRAWINGS, SPECIFICATIONS OR OTHER DATA ARE USED FOR ANY PURPOSE OTHER THAN IN CONNECTION WITH A DEFINITELY RELATED GOVERNMENT PROCUREMENT OPERATION, THE UNITED STATES GOVERNMENT THEREBY INCURS NO RESPONSIBILITY NOR ANY OBLIGATION WHATSOEVER AND THE FACT THAT THE GOVERNMENT MAY HAVE FORMULATED, FURNISHED, OR IN ANY WAY SUPPLIED THE SAID DRAWINGS, SPECIFICATIONS, OR OTHER DATA IS NOT REGARDED BY IMPLICATION OR OTHERWISE AS IN ANY MANNER LICENSING THE HOLDER OR ANY OTHER PERSON OR CORPORATION, OR CONVEYING ANY RIGHTS OR PERMISSION TO MANUFACTURE, USE, OR SELL ANY PATENTED INVENTION THAT MAY IN ANY WAY BE RELATED THERETO.

FED SUP CLASS
4730

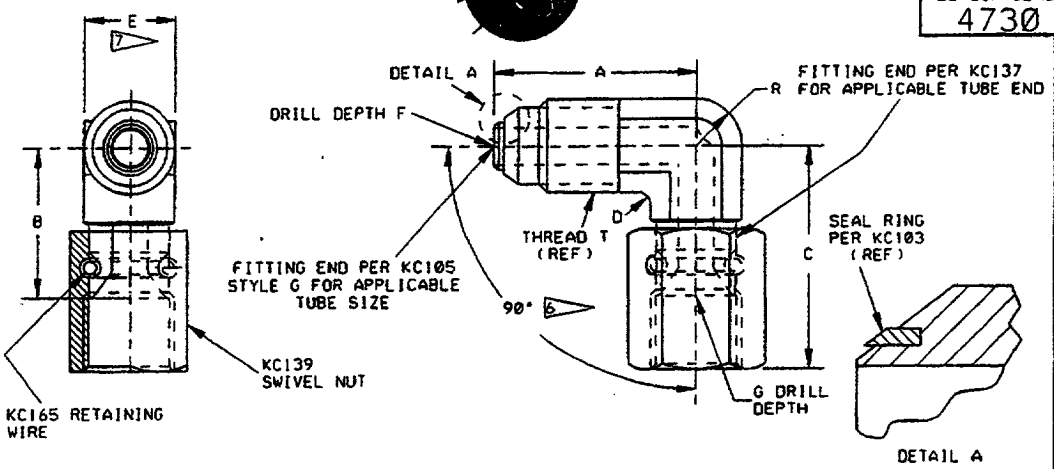

DASH NO. CRE STEEL	DASH NO. AL ALLOY	TUBE OD REF	THREAD T REF	A DIM. +.000 -.063	B DIM +.000 -.031	C DIM REF	D RAD ±.03	R RAD +.03 -.03	E PAD DIM.	F DIM +.047 -.011	G DIM +.016 -.011	SWIVEL NUT KC139 CRE STEEL	SWIVEL NUT KC139 AL ALLOY	RETAINING WIRE
K4	D4	¼	7/16-20	.906	.704	1.000	.063	.242	.438	.906	.734	K4	D4	KC165-4
K6	D6	⅜	9/16-18	1.078	.891	1.250	.094	.317	.563	1.094	.933	K6	D6	KC165-6
K8	D8	½	3/4-16	1.266	.969	1.375		.414	.750	1.281	1.016	K8	D8	KC165-8
K10	D10	⅝	7/8-14	1.469	1.141	1.625		.484	.875	1.484	1.188	K10	D10	KC165-10
K12	D12	¾	1-1/16-12	1.672	1.204	1.750		.586	1.063	1.688	1.250	K12	D12	KC165-12
K16	D16	1	1-5/16-12	1.828	1.422	2.000	.125	.719	1.313	1.906	1.531	K16	D16	KC165-16
K20	D20	1¼	1-5/8-12	2.078	1.704	2.313		.875	1.625	2.156	1.812	K20	D20	KC165-20
K24	D24	1½	1-7/8-12	2.344	1.875	2.594	.188	1.031	1.875	2.609	2.172	K24	D24	KC165-24
K28	D28	1¾	2-1/4-12	2.860	2.063	2.900		1.188	2.250	2.931	2.212	K28	D28	KC165-28
K32	D32	2	2-1/2-12	3.078	2.454	3.375	.250	1.383	2.563	3.219	2.673	K32	D32	KC165-32

MATERIAL: SEE PROCUREMENT SPECIFICATION.
ALUMINUM ALLOY, 2014-T6, CODE "D"
CORROSION RESISTANT STEEL (CLASS 316), CODE "K" (WAS CODE "C")

FINISH: SEE PROCUREMENT SPECIFICATION.

SCREW THREAD: SEE PROCUREMENT SPECIFICATION.

NOTES:
1. REMOVE BURRS AND SLIVERS. BREAK SHARP EDGES UNLESS OTHERWISE NOTED.
2. DIMENSIONS IN INCHES. UNLESS OTHERWISE SPECIFIED, TOLERANCE DECIMALS ±.016.
3. FOR DESIGN FEATURE PURPOSES, THIS DRAWING TAKES PRECEDENCE OVER PROCUREMENT DOCUMENTS REFERENCED HEREIN.
4. REFERENCED DOCUMENTS SHALL BE OF THE ISSUE IN EFFECT ON THE DATE OF INVITATION FOR BID.
5. MARKING OF FITTINGS SHALL BE CONSISTENT WITH PROCUREMENT SPECIFICATION USING APPLICABLE KC STANDARD AND PART NUMBER DESIGNATIONS AS SHOWN ON THIS DRAWING.

6 TOLERANCE UP TO AND INCLUDING -6 SIZE ±2-1/2° ABOVE -6 SIZE ±1-1/2°.

7 E DIMENSION FOR -32 SIZE EQUAL TO 2.500" IS ACCEPTABLE BUT 2.563" IS PREFERRED

EXAMPLE OF PART NOS.
KC131K8 = ELBOW WITH SWIVEL END, ½" OD TUBING, CORROSION RESISTANT STEEL
KC131D12 = ELBOW WITH SWIVEL END, ¾" OD TUBING, ALUMINUM ALLOY

APPROVED: 8-12-65
REVISED: (E) REV & REDRAWN 8-1-90 (F) ADDED NOTE 7 9-1-97

CUSTODIAN: JOHN F. KENNEDY SPACE CENTER

PROCUREMENT SPEC. KSC-F-124

COORDINATION STATUS KSC DE

ELBOW ASSY, 90°, FLARED TUBE & FEMALE SWIVEL END, FOR SEAL RING

STANDARD PART
KC131

SHEET 1 OF 1

KSC FORM 32-85 (CG 4/92)

FED SUP CLASS 4730

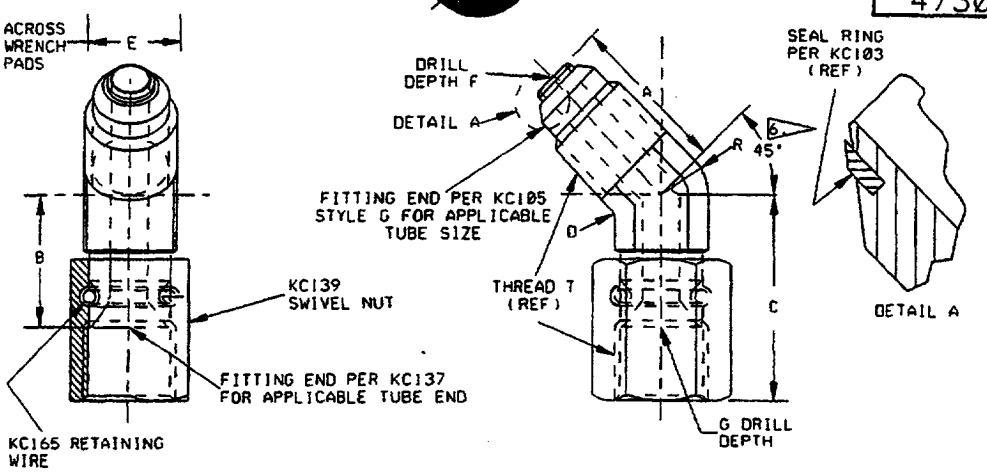

DASH NO. CRE STEEL	DASH NO. AL ALLOY	TUBE OD REF	THREAD T REF	A DIM. +.000 -.063	B DIM +.000 -.031	C DIM REF	D RAD ±.03	R RAD +.03 -.03	E PAD DIM.	F DIM +.047 -.011	G DIM +.016 -.011	SWIVEL NUT KC139 CRE STEEL	SWIVEL NUT KC139 AL ALLOY	RETAINING WIRE
K4	D4	1/4	7/16-20	.750	.610	.9380	.063	.242	.438	.766	.656	K4	D4	KC165-4
K6	D6	3/8	9/16-18	.860	.766	1.125	.094	.317	.563	.891	.828	K6	D6	KC165-6
K8	D8	1/2	3/4-16	1.016	.875	1.281		.414	.750	1.063	.953	K8	D8	KC165-8
K10	D10	5/8	7/8-14	1.141	.954	1.438	.125	.484	.875	1.203	1.047	K10	D10	KC165-10
K12	D12	3/4	1-1/16-12	1.313	.954	1.500		.586	1.063	1.391	1.063	K12	D12	KC165-12
K16	D16	1	1-5/16-12	1.500	1.172	1.750		.719	1.313	1.625	1.328	K16	D16	KC165-16
K20	D20	1 1/4	1-5/8-12	1.625	1.422	2.031		.875	1.625	1.797	1.625	K20	D20	KC165-20
K24	D24	1 1/2	1-7/8-12	1.813	1.532	2.250		1.031	1.875	2.031	1.781	K24	D24	KC165-24
K28	D28	1 3/4	2-1/4-12	2.000	1.766	2.619	.188	1.125	2.250	2.266	2.031	K28	D28	KC165-28
K32	D32	2	2-1/2-12	2.250	1.985	2.906	.250	1.383	2.500	2.578	2.313	K32	D32	KC165-32

MATERIAL: SEE PROCUREMENT SPECIFICATION.
ALUMINUM ALLOY, 2014-T6, CODE "D"
CORROSION RESISTANT STEEL (CLASS 316), CODE "K" (WAS CODE "C")

FINISH: SEE PROCUREMENT SPECIFICATION.

SCREW THREAD: SEE PROCUREMENT SPECIFICATION.

NOTES:
1. REMOVE BURRS AND SLIVERS. BREAK SHARP EDGES UNLESS OTHERWISE NOTED.
2. DIMENSIONS IN INCHES. UNLESS OTHERWISE SPECIFIED, TOLERANCE DECIMALS ±.016.
3. FOR DESIGN FEATURE PURPOSES, THIS DRAWING TAKES PRECEDENCE OVER PROCUREMENT DOCUMENTS REFERENCED HEREIN.
4. REFERENCED DOCUMENTS SHALL BE OF THE ISSUE IN EFFECT ON THE DATE OF INVITATION FOR BID.
5. MARKING OF FITTINGS SHALL BE CONSISTENT WITH PROCUREMENT SPECIFICATION USING APPLICABLE KC STANDARD AND PART NUMBER DESIGNATIONS AS SHOWN ON THIS DRAWING.

6 TOLERANCE UP TO AND INCLUDING -6 SIZE ±2-1/2° ABOVE -6 SIZE ±1-1/2°.

EXAMPLE OF PART NOS.
KC132K8 = 45° ELBOW WITH SWIVEL END, 1/2" OD TUBING, CORROSION RESISTANT STEEL
KC132D12 = 45° ELBOW WITH SWIVEL END, 3/4" OD TUBING, ALUMINUM ALLOY

APPROVED: 8-12-65 REVISED: (D) REV & REDRAWN 8-1-90

CUSTODIAN: JOHN F. KENNEDY SPACE CENTER

PROCUREMENT SPEC. KSC-F-124	ELBOW ASSY, 45°, FLARED TUBE & FEMALE SWIVEL END, FOR SEAL RING	STANDARD PART
COORDINATION STATUS KSC DE		KC132
		SHEET 1 OF 1

KSC FORM 32-85 (CG 4/92)

NOTICE: WHEN GOVERNMENT DRAWINGS, SPECIFICATIONS OR OTHER DATA ARE USED FOR ANY PURPOSE OTHER THAN IN CONNECTION WITH A DEFINITELY RELATED GOVERNMENT PROCUREMENT OPERATION, THE UNITED STATES GOVERNMENT THEREBY INCURS NO RESPONSIBILITY NOR ANY OBLIGATION WHATSOEVER AND THE FACT THAT THE GOVERNMENT MAY HAVE FORMULATED, FURNISHED, OR IN ANY WAY SUPPLIED THE SAID DRAWINGS, SPECIFICATIONS, OR OTHER DATA IS NOT REGARDED BY IMPLICATION OR OTHERWISE AS IN ANY MANNER LICENSING THE HOLDER OR ANY OTHER PERSON OR CORPORATION, OR CONVEYING ANY RIGHTS OR PERMISSION TO MANUFACTURE, USE, OR SELL ANY PATENTED INVENTION THAT MAY IN ANY WAY BE RELATED THERETO.

NOTICE: WHEN GOVERNMENT DRAWINGS, SPECIFICATIONS OR OTHER DATA ARE USED FOR ANY PURPOSE OTHER THAN IN CONNECTION WITH A DEFINITELY RELATED GOVERNMENT PROCUREMENT OPERATION, THE UNITED STATES GOVERNMENT THEREBY INCURS NO RESPONSIBILITY NOR ANY OBLIGATION WHATSOEVER AND THE FACT THAT THE GOVERNMENT MAY HAVE FORMULATED, FURNISHED, OR IN ANY WAY SUPPLIED THE SAID DRAWINGS, SPECIFICATIONS, OR OTHER DATA IS NOT REGARDED BY IMPLICATION OR OTHERWISE AS IN ANY MANNER LICENSING THE HOLDER OR ANY OTHER PERSON OR CORPORATION, OR CONVEYING ANY RIGHTS OR PERMISSION TO MANUFACTURE, USE, OR SELL ANY PATENTED INVENTION THAT MAY IN ANY WAY BE RELATED THERETO.

FED SUP CLASS
4730

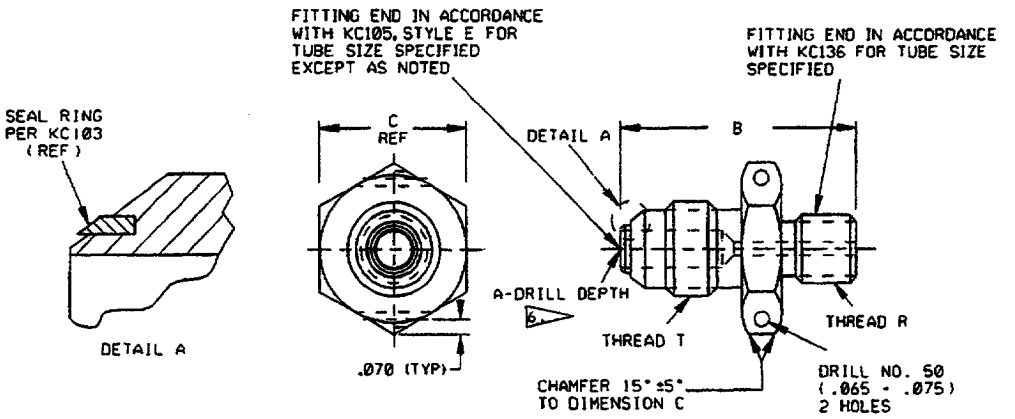

MATERIAL: SEE PROCUREMENT SPECIFICATION.
ALUMINUM ALLOY, 2024-T6, CODE "D"
CORROSION RESISTANT STEEL (CLASS 316), CODE "K" (WAS CODE "C")

FINISH: SEE PROCUREMENT SPECIFICATION.

SCREW THREAD: SEE PROCUREMENT SPECIFICATION.

NOTES:
1. REMOVE BURRS AND SLIVERS. BREAK SHARP EDGES UNLESS OTHERWISE NOTED.
2. DIMENSIONS IN INCHES. UNLESS OTHERWISE SPECIFIED, TOLERANCE DECIMALS ±.016.
3. FOR DESIGN FEATURE PURPOSES. THIS DRAWING TAKES PRECEDENCE OVER PROCUREMENT DOCUMENTS REFERENCED HEREIN.
4. REFERENCED DOCUMENTS SHALL BE OF THE ISSUE IN EFFECT ON THE DATE OF INVITATION FOR BID.
5. MARKING OF FITTINGS SHALL BE CONSISTENT WITH PROCUREMENT SPECIFICATION USING APPLICABLE KC STANDARD AND PART NUMBER DESIGNATIONS AS SHOWN ON THIS DRAWING.

6 AT THE OPTION OF THE MANUFACTURER, THE SMALLER INSIDE DIAMETER DIMENSION MAY BE DRILLED FROM PORT TO PORT.

EXAMPLE OF PART NOS.
KC133K8-4 = REDUCER-ADAPTER, ½" OD TUBING TO ¼" BOSS END, CORROSION RESISTANT STEEL
KC133D12-8 = REDUCER-ADAPTER, ¾" OD TUBING TO ½" BOSS END, ALUMINUM ALLOY

APPROVED: 8-12-65
REVISED: (E) REV & REDRAWN 8-1-90

CUSTODIAN: JOHN F. KENNEDY SPACE CENTER		
PROCUREMENT SPEC. KSC-F-124	REDUCER - ADAPTER FLARED TUBE TO BOSS FOR SEAL RING	STANDARD PART
COORDINATION STATUS		KC133
KSC DE		SHEET 1 OF 2

KSC FORM 32-85 (CG 4/92)

FED SUP CLASS
4730

DASH NO. CRES STEEL	DASH NO. AL ALLOY	FLARED TUBE END TUBE OD REF	FLARED TUBE END THREAD T REF	BOSS END TUBE OD REF	BOSS END THREAD R REF	A MAX (6)	B +.000 -.060	C REF
K4-2	D4-2	¼	7/16-20	⅛	5/16-24	.452	1.100	.688
K4-3	D4-3			3/16	3/8-24		1.066	
K6-2	D6-2	⅜	9/16-18	⅛	5/16-24	.457	1.242	.813
K6-3	D6-3			3/16	3/8-24		1.208	
K6-4	D6-4			¼	7/16-20		1.335	
K6-5	D6-5			5/16	1/2-20			
K8-2	D8-2	½	3/4-16	⅛	5/16-24	.538	1.357	1.000
K8-3	D8-3			3/16	3/8-24		1.323	
K8-4	D8-4			¼	7/16-20		1.450	
K8-5	D8-5			5/16	1/2-20			
K8-6	D8-6			⅜	9/16-18		1.445	
K10-4	D10-4	⅝	7/8-14	¼	7/16-20	.618	1.533	1.125
K10-6	D10-6			⅜	9/16-18		1.528	
K10-8	D10-8			½	3/4-16		1.567	
K12-4	D12-4	¾	1-1/16-12	¼	7/16-20	.703	1.686	1.375
K12-5	D12-5			5/16	1/2-20			
K12-6	D12-6			⅜	9/16-18		1.681	
K12-8	D12-8			½	3/4-16		1.719	
K12-10	D12-10			⅝	7/8-14		1.616	
K16-4	D16-4	1	1-5/16-12	¼	7/16-20	.741	1.722	1.625
K16-8	D16-8			½	3/4-16		1.809	
K16-10	D16-10			⅝	7/8-14		1.852	
K16-12	D16-12			¾	1-1/16-12		1.912	
K20-4	D20-4	1¼	1-5/8-12	¼	7/16-20	.778	1.965	1.875
K20-12	D20-12			¾	1-1/16-12		2.202	
K20-16	D20-16			1	1-5/16-12			
K24-16	D24-16	1½	1-7/8-12			.878	2.159	2.125
K24-20	D24-20			1¼	1-5/8-12		2.154	
K28-20	D28-20	1¾	2-1/4-12			.978	2.373	2.500
K28-24	D28-24			1½	1-7/8-12		2.404	
K32-24	D32-24	2	2-1/2-12			1.078	2.529	2.750
K32-28	D32-28			1¾	2-1/4-12		2.684	

APPROVED: 8-12-65 REVISED: (E) REV & REDRAWN 8-1-90

CUSTODIAN: JOHN F. KENNEDY SPACE CENTER

PROCUREMENT SPEC. KSC-F-124

COORDINATION STATUS KSC DE

REDUCER - ADAPTER
FLARED TUBE TO BOSS
FOR SEAL RING

STANDARD PART

KC133

SHEET 2 OF 2

KSC FORM 32-85 (CG 4/92)

NOTICE: WHEN GOVERNMENT DRAWINGS, SPECIFICATIONS OR OTHER DATA ARE USED FOR ANY PURPOSE OTHER THAN IN CONNECTION WITH A DEFINITELY RELATED GOVERNMENT PROCUREMENT OPERATION, THE UNITED STATES GOVERNMENT THEREBY INCURS NO RESPONSIBILITY NOR ANY OBLIGATION WHATSOEVER AND THE FACT THAT THE GOVERNMENT MAY HAVE FORMULATED, FURNISHED, OR IN ANY WAY SUPPLIED THE SAID DRAWINGS, SPECIFICATIONS, OR OTHER DATA IS NOT REGARDED BY IMPLICATION OR OTHERWISE AS IN ANY MANNER LICENSING THE HOLDER OR ANY OTHER PERSON OR CORPORATION, OR CONVEYING ANY RIGHTS OR PERMISSION TO MANUFACTURE, USE, OR SELL ANY PATENTED INVENTION THAT MAY IN ANY WAY BE RELATED THERETO.

FED SUP CLASS
4730

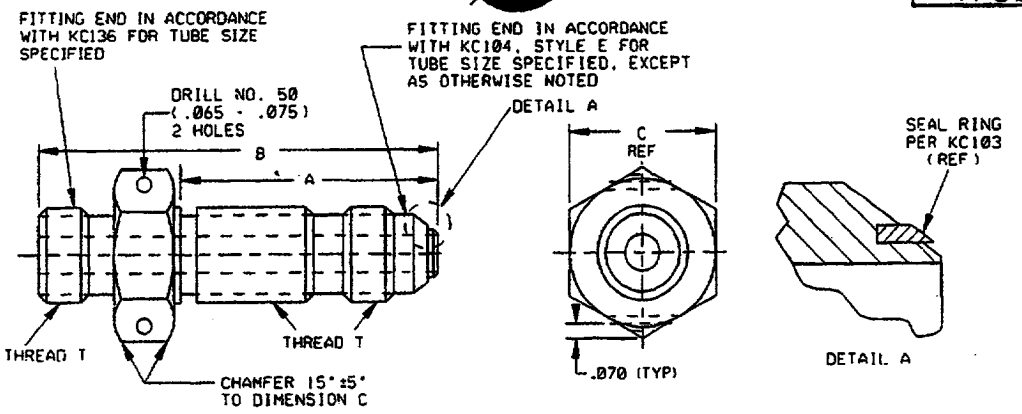

DASH NO. CRE STEEL	DASH NO. AL ALLOY	TUBE OD REF	THREAD T REF	A +.000 -.060	B +.000 -.060	C REF
K4	D4	¼	7/16-20	1.213	1.881	.688
K6	D6	⅜	9/16-18	1.291	2.078	.813
K8	D8	½	3/4-16	1.447	2.312	1.000
K10	D10	⅝	7/8-14	1.588	2.523	1.125
K12	D12	¾	1-1/16-12	1.760	2.797	1.375
K16	D16	1	1-5/16-12	1.760	2.834	1.625
K20	D20	1¼	1-5/8-12	1.807	2.956	1.875
K24	D24	1½	1-7/8-12	1.822	3.018	2.125
K28	D28	1¾	2-1/4-12	1.979	3.314	2.500
K32	D32	2	2-1/2-12	2.104	3.467	2.750

MATERIAL: SEE PROCUREMENT SPECIFICATION.
ALUMINUM ALLOY, 2024-T6, CODE "D"
CORROSION RESISTANT STEEL (CLASS 316), CODE "K" (WAS CODE "C")

FINISH: SEE PROCUREMENT SPECIFICATION.

SCREW THREAD: SEE PROCUREMENT SPECIFICATION.

NOTES:
1. REMOVE BURRS AND SLIVERS. BREAK SHARP EDGES UNLESS OTHERWISE NOTED.
2. DIMENSIONS IN INCHES. UNLESS OTHERWISE SPECIFIED, TOLERANCE DECIMALS ±.016.
3. FOR DESIGN FEATURE PURPOSES, THIS DRAWING TAKES PRECEDENCE OVER PROCUREMENT DOCUMENTS REFERENCED HEREIN.
4. REFERENCED DOCUMENTS SHALL BE OF THE ISSUE IN EFFECT ON THE DATE OF INVITATION FOR BID.
5. MARKING OF FITTINGS SHALL BE CONSISTENT WITH PROCUREMENT SPECIFICATION USING APPLICABLE KC STANDARD AND PART NUMBER DESIGNATIONS AS SHOWN ON THIS DRAWING.

EXAMPLE OF PART NOS.
KC134K4 = ADAPTER, BOSS TO BULKHEAD, ¼" OD TUBING, CORROSION RESISTANT STEEL
KC134D8 = ADAPTER, BOSS TO BULKHEAD, ½" OD TUBING, ALUMINUM ALLOY

APPROVED: 8-12-65
REVISED: (E) REV & REDRAWN 8-1-90

CUSTODIAN: JOHN F. KENNEDY SPACE CENTER

PROCUREMENT SPEC. KSC-F-124

COORDINATION STATUS KSC DE

ADAPTER, FLARED TUBE ⅜" BULKHEAD TO BOSS FOR SEAL RING

STANDARD PART KC134

SHEET 1 OF 1

KSC FORM 32-85 (CG 4/92)

NOTICE: WHEN GOVERNMENT DRAWINGS, SPECIFICATIONS OR OTHER DATA ARE USED FOR ANY PURPOSE OTHER THAN IN CONNECTION WITH A DEFINITELY RELATED GOVERNMENT PROCUREMENT OPERATION, THE UNITED STATES GOVERNMENT THEREBY INCURS NO RESPONSIBILITY NOR ANY OBLIGATION WHATSOEVER AND THE FACT THAT THE GOVERNMENT MAY HAVE FORMULATED, FURNISHED, OR IN ANY WAY SUPPLIED THE SAID DRAWINGS, SPECIFICATIONS, OR OTHER DATA IS NOT REGARDED BY IMPLICATION OR OTHERWISE AS IN ANY MANNER LICENSING THE HOLDER OR ANY OTHER PERSON OR CORPORATION, OR CONVEYING ANY RIGHTS OR PERMISSION TO MANUFACTURE, USE, OR SELL ANY PATENTED INVENTION THAT MAY IN ANY WAY BE RELATED THERETO.

NOTICE: WHEN GOVERNMENT DRAWINGS, SPECIFICATIONS OR OTHER DATA ARE USED FOR ANY PURPOSE OTHER THAN IN CONNECTION WITH A DEFINITELY RELATED GOVERNMENT PROCUREMENT OPERATION, THE UNITED STATES GOVERNMENT THEREBY INCURS NO RESPONSIBILITY NOR ANY OBLIGATION WHATSOEVER AND THE FACT THAT THE GOVERNMENT MAY HAVE FORMULATED, FURNISHED, OR IN ANY WAY SUPPLIED THE SAID DRAWINGS, SPECIFICATIONS, OR OTHER DATA IS NOT REGARDED BY IMPLICATION OR OTHERWISE AS IN ANY MANNER LICENSING THE HOLDER OR ANY OTHER PERSON OR CORPORATION, OR CONVEYING ANY RIGHTS OR PERMISSION TO MANUFACTURE, USE, OR SELL ANY PATENTED INVENTION THAT MAY IN ANY WAY BE RELATED THERETO.

FED SUP CLASS
4730

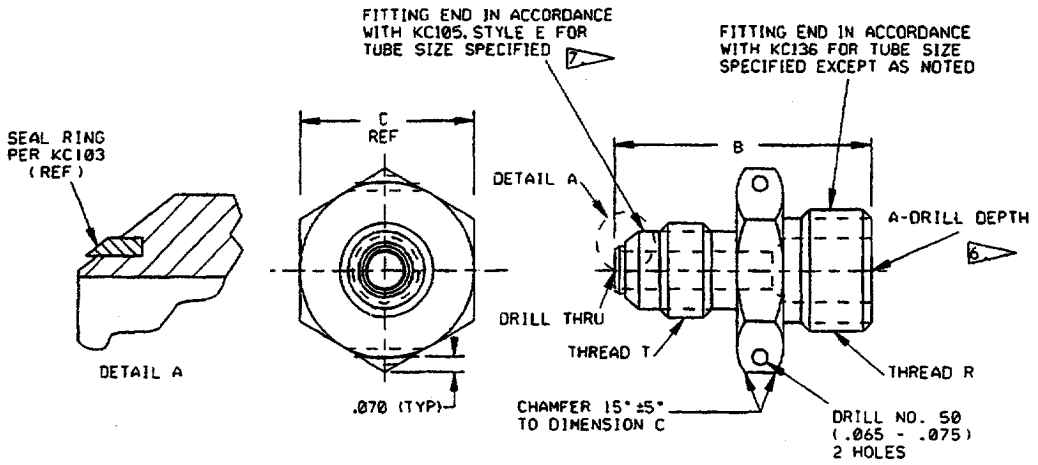

MATERIAL: SEE PROCUREMENT SPECIFICATION.
ALUMINUM ALLOY, 2024-T6, CODE "D"
CORROSION RESISTANT STEEL (CLASS 316), CODE "K" (WAS CODE "C")

FINISH: SEE PROCUREMENT SPECIFICATION.

SCREW THREAD: SEE PROCUREMENT SPECIFICATION.

NOTES:

1. REMOVE BURRS AND SLIVERS. BREAK SHARP EDGES UNLESS OTHERWISE NOTED.
2. DIMENSIONS IN INCHES. UNLESS OTHERWISE SPECIFIED, TOLERANCE DECIMALS ±.016.
3. FOR DESIGN FEATURE PURPOSES, THIS DRAWING TAKES PRECEDENCE OVER PROCUREMENT DOCUMENTS REFERENCED HEREIN.
4. REFERENCED DOCUMENTS SHALL BE OF THE ISSUE IN EFFECT ON THE DATE OF INVITATION FOR BID.
5. MARKING OF FITTINGS SHALL BE CONSISTENT WITH PROCUREMENT SPECIFICATION USING APPLICABLE KC STANDARD AND PART NUMBER DESIGNATIONS AS SHOWN ON THIS DRAWING.

6 AT THE OPTION OF THE MANUFACTURER, THE SMALLER INSIDE DIAMETER DIMENSION MAY BE DRILLED FROM PORT TO PORT.

7 FOR -2, -3, & -5 TUBE SIZES, FITTING END SHALL BE IN COMPLIANCE WITH MS33656.

EXAMPLE OF PART NOS.
KC135K6-8 = EXPANDER-ADAPTER, 3/8" OD TUBING TO 1/2" BOSS END, CORROSION RESISTANT STEEL
KC135D8-10 = EXPANDER-ADAPTER, 1/2" OD TUBING TO 5/8" BOSS END, ALUMINUM ALLOY

REVISED: (E) REV & REDRAWN 8-1-90

APPROVED: 8-12-65

CUSTODIAN: JOHN F. KENNEDY SPACE CENTER		
PROCUREMENT SPEC. KSC-F-124	EXPANDER - ADAPTER FLARED TUBE TO BOSS, FOR SEAL RING	STANDARD PART
COORDINATION STATUS KSC DE		KC135
		SHEET 1 OF 2

KSC FORM 32-85 (CG 4/92)

FED SUP CLASS
4730

DASH NO.		FLARED TUBE END		BOSS END		A MAX 6.	B +.000 -.060	C REF
CRES STEEL	AL ALLOY	TUBE OD REF	THREAD T REF	TUBE OD REF	THREAD R REF			
K2-4	D2-4	1/8	5/16-24	1/4	7/16-20	.311	1.084	.688
K3-4	D3-4	3/16	3/8-24				1.115	
K2-6	D2-6	1/8	5/16-24	3/8	9/16-18	.336	1.163	.813
K3-6	D3-6	3/16	3/8-24				1.194	
K4-6	D4-6	1/4	7/16-20				1.265	
K5-6	D5-6	5/16	1/2-20					
K2-8	D2-8	1/8	5/16-24	1/2	3/4-16	.417	1.285	1.000
K3-8	D3-8	3/16	3/8-24				1.315	
K4-8	D4-8	1/4	7/16-20				1.390	
K5-8	D5-8	5/16	1/2-20					
K6-8	D6-8	3/8	9/16-18				1.392	
K4-10	D4-10	1/4	7/16-20	5/8	7/8-14	.454	1.460	1.125
K6-10	D6-10	3/8	9/16-18					
K8-10	D8-10	1/2	3/4-16					
K4-12	D4-12	1/4	7/16-20	3/4	1-1/16-12	.509	1.560	1.375
K5-12	D5-12	5/16	1/2-20					
K6-12	D6-12	3/8	9/16-18				1.567	
K8-12	D8-12	1/2	3/4-16				1.668	
K10-12	D10-12	5/8	7/8-14				1.769	
K4-16	D4-16	1/4	7/16-20	1	1-5/16-12	.538	1.597	1.625
K6-16	D6-16	3/8	9/16-18				1.603	
K8-16	D8-16	1/2	3/4-16				1.704	
K10-16	D10-16	5/8	7/8-14				1.805	
K12-16	D12-16	3/4	1-1/16-12				1.911	
K4-20	D4-20	1/4	7/16-20	1 1/4	1-5/8-12	.610	1.693	1.875
K12-20	D12-20	3/4	1-1/16-12				2.007	
K16-20	D16-20	1	1-5/16-12				2.054	
K16-24	D16-24	1	1-5/16-12	1 1/2	1-7/8-12	.635	2.095	2.125
K20-24	D20-24	1 1/4	1-5/8-12				2.142	
K20-28	D20-28	1 1/4	1-5/8-12	1 3/4	2-1/4-12	.759	2.297	2.500
K24-28	D24-28	1 1/2	1-7/8-12				2.422	
K24-32	D24-32	1 1/2	1-7/8-12	2	2-1/2-12	.782	2.516	2.750
K28-32	D28-32	1 3/4	2-1/4-12				2.641	

APPROVED: 8-12-65 REVISED: (E) REV & REDRAWN 8-1-90

CUSTODIAN: JOHN F. KENNEDY SPACE CENTER

PROCUREMENT SPEC. KSC-F-124

COORDINATION STATUS KSC DE

EXPANDER - ADAPTER
FLARED TUBE TO BOSS,
FOR SEAL RING

STANDARD PART

KC135

SHEET 2 OF 2

KSC FORM 32-85 (CG 4/92)

NOTICE: WHEN GOVERNMENT DRAWINGS, SPECIFICATIONS OR OTHER DATA ARE USED FOR ANY PURPOSE OTHER THAN IN CONNECTION WITH A DEFINITELY RELATED GOVERNMENT PROCUREMENT OPERATION, THE UNITED STATES GOVERNMENT THEREBY INCURS NO RESPONSIBILITY NOR ANY OBLIGATION WHATSOEVER AND THE FACT THAT THE GOVERNMENT MAY HAVE FORMULATED, FURNISHED, OR IN ANY WAY SUPPLIED THE SAID DRAWINGS, SPECIFICATIONS, OR OTHER DATA IS NOT REGARDED BY IMPLICATION OR OTHERWISE AS IN ANY MANNER LICENSING THE HOLDER OR ANY OTHER PERSON OR CORPORATION, OR CONVEYING ANY RIGHTS OR PERMISSION TO MANUFACTURE, USE, OR SELL ANY PATENTED INVENTION THAT MAY IN ANY WAY BE RELATED THERETO.

NOTICE: WHEN GOVERNMENT DRAWINGS, SPECIFICATIONS OR OTHER DATA ARE USED FOR ANY PURPOSE OTHER THAN IN CONNECTION WITH A DEFINITELY RELATED GOVERNMENT PROCUREMENT OPERATION, THE UNITED STATES GOVERNMENT THEREBY INCURS NO RESPONSIBILITY NOR ANY OBLIGATION WHATSOEVER AND THE FACT THAT THE GOVERNMENT MAY HAVE FORMULATED, FURNISHED, OR IN ANY WAY SUPPLIED THE SAID DRAWINGS, SPECIFICATIONS, OR OTHER DATA IS NOT REGARDED BY IMPLICATION OR OTHERWISE AS IN ANY MANNER LICENSING THE HOLDER OR ANY OTHER PERSON OR CORPORATION, OR CONVEYING ANY RIGHTS OR PERMISSION TO MANUFACTURE, USE, OR SELL ANY PATENTED INVENTION THAT MAY IN ANY WAY BE RELATED THERETO.

FED SUP CLASS
NONE

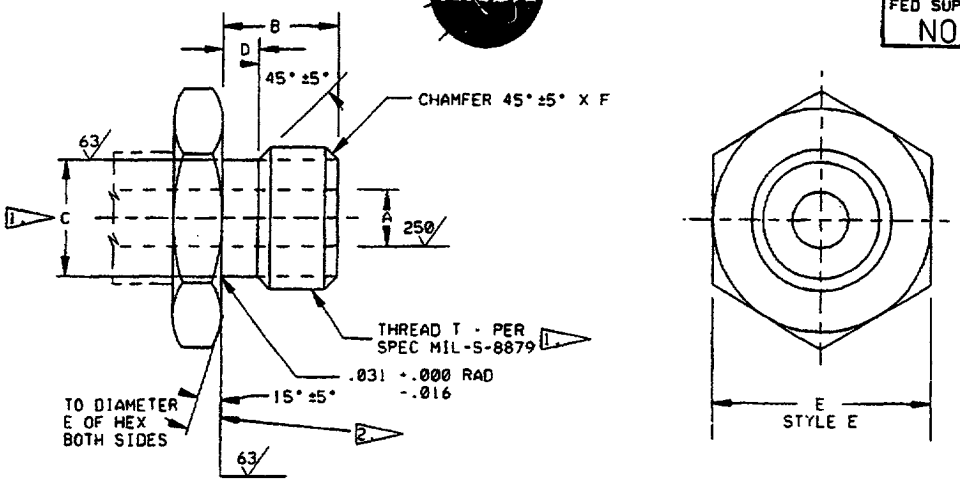

DASH NO.	TUBE OD REF	THREAD T MIL-S-8879 10	A DIA		B +.000 -.015	C DIA +.002 -.003 10	D +.015 -.000 7	E DIA		F MIN	F MAX
-2	1/8	.3125-24UNJF-3A	.062	±.004	.351	.250	.063	.563	+.003 -.004	.031	.052
-3	3/16	.3750-24UNJF-3A	.125		.355	.312		.625			
-4	1/4	.4375-20UNJF-3A	.172		.389	.364	.075	.688		.038	.063
-5	5/16	.5000-20UNJF-3A	.234		.411	.426		.750			
-6	3/8	.5625-18UNJF-3A	.297		.420	.481	.083	.813		.042	.069
-8	1/2	.7500-16UNJF-3A	.391		.521	.660	.094	1.000		.047	.078
-10	5/8	.8750-14UNJF-3A	.484		.567	.773	.107	1.125		.054	.089
-12	3/4	1.0625-12UNJ-3A	.609	±.005	.636	.945	.125	1.375		.063	.104
-16	1	1.3125-12UNJ-3A	.844		.672	1.195		1.625	±.016		
-20	1 1/4	1.6250-12UNJ-3A	1.078	+.008 -.005		1.507		1.875	±.020		
-24	1 1/2	1.8750-12UNJ-3A	1.312		.720	1.756		2.125			
-28	1 3/4	2.2500-12UNJ-3A	1.547	+.010 -.005	.772	2.131		2.500			
-32	2	2.5000-12UNJ-3A	1.781		.887	2.381		2.750			

NOTES:

1. DIAMETER C AND T THREAD (PITCH DIA) SHALL BE CONCENTRIC WITHIN .015 FULL INDICATOR READING.
2. SQUARENESS BETWEEN THREAD T PITCH DIAMETER AND FACE OF HEX SHALL NOT EXCEED .005 FOR SIZES DASH 10 AND SMALLER OR .008 FOR LARGER SIZES, WHEN MEASURED AT THE OUTER DIAMETER OF THE FACE.
3. DIMENSIONS IN INCHES, TOLERANCES NOTED.
4. ROUGHNESS OF MACHINED SURFACES SHALL BE 125 AA MAX PER ANSI B46.1 UNLESS OTHERWISE SPECIFIED.
5. BREAK ALL SHARP EDGES UNLESS OTHERWISE NOTED. REMOVE BURRS AND SLIVERS.
6. THIS STANDARD TAKES PRECEDENCE OVER DOCUMENTS REFERENCED HEREIN.

APPROVED: 8-12-65 REVISED: (F) REV & REDRAWN 8-1-90

CUSTODIAN: JOHN F. KENNEDY SPACE CENTER		
PROCUREMENT SPEC. NONE	STANDARD DIMENSIONS FOR FITTING END, STRAIGHT THREAD	DESIGN STANDARD
COORDINATION STATUS KSC DE		KC136
		SHEET 1 OF 1

KSC FORM 32-85 (CG 4/92)

FED SUP CLASS
NONE

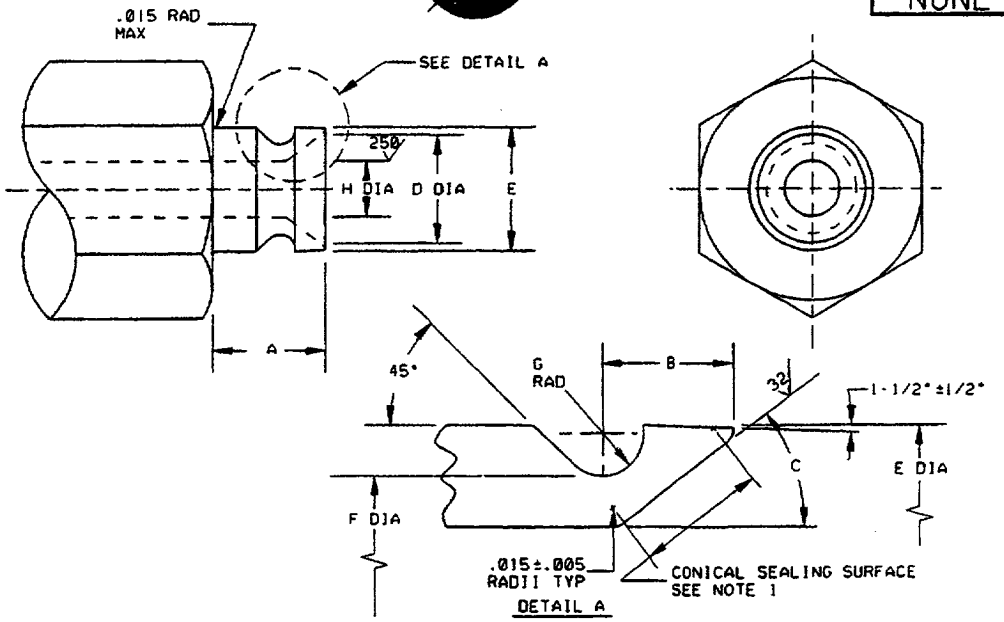

DASH NO.	TUBE OD REF	A ±.016	B	C DEG ±30'	D DIA	E DIA +.005 -.005	F DIA +.000 -.005	G RAD +.005 -.003	H DIA	
-4	¼	.370	.140	39 ½	.295	.383	.278	.044	.172	+.003 -.004
-6	⅜	.465	.156		.435	.502	.397		.297	±.004
-8	½		.188		.572	.682	.565	.050	.391	
-10	⅝	.454			.680	.797	.681		.484	
-12	¾	.512	.219		.850	.972	.824	.066	.609	±.005
-16	1	.579	.250	37	1.075	1.224	1.072		.844	+.007 -.005
-20	1¼	.672	.344		1.410	1.536	1.382		1.078	+.008 -.005
-24	1½	.721	.381		1.625	1.786	1.636		1.312	
-28	1¾	.829	.394		2.034	2.178	2.027		1.546	+.010 -.005
-32	2		.406		2.284	2.411	2.262		1.781	

NOTES:

1. THE CONICAL SEALING SURFACE SHALL BE CONCENTRIC WITH E DIA WITHIN .005 FULL INDICATOR READING.
2. MACHINED SURFACE ROUGHNESS, UNLESS OTHERWISE SPECIFIED, SHALL NOT EXCEED 63√ PER ANSI B46.1.
3. DIMENSIONS IN INCHES UNLESS OTHERWISE SPECIFIED; DECIMALS ±.005 ANGLES ±5°.
4. BREAK ALL SHARP EDGES UNLESS OTHERWISE NOTED. REMOVE BURRS AND SLIVERS.
5. THIS STANDARD TAKES PRECEDENCE OVER DOCUMENTS REFERENCED HEREIN.

APPROVED: 8-12-65 REVISED: (F) REV & REDRAWN 8-1-90

CUSTODIAN: JOHN F. KENNEDY SPACE CENTER

PROCUREMENT SPEC. NONE

COORDINATION STATUS KSC DE

FITTING END, SWIVEL FLARED TUBE CONNECTOR, STANDARD DIMENSIONS FOR

DESIGN STANDARD KC137

SHEET 1 OF 1

KSC FORM 32-85 (CG 4/92)

NOTICE: WHEN GOVERNMENT DRAWINGS, SPECIFICATIONS OR OTHER DATA ARE USED FOR ANY PURPOSE OTHER THAN IN CONNECTION WITH A DEFINITELY RELATED GOVERNMENT PROCUREMENT OPERATION, THE UNITED STATES GOVERNMENT THEREBY INCURS NO RESPONSIBILITY NOR ANY OBLIGATION WHATSOEVER AND THE FACT THAT THE GOVERNMENT MAY HAVE FORMULATED, FURNISHED, OR IN ANY WAY SUPPLIED THE SAID DRAWINGS, SPECIFICATIONS, OR OTHER DATA IS NOT REGARDED BY IMPLICATION OR OTHERWISE AS IN ANY MANNER LICENSING THE HOLDER OR ANY OTHER PERSON OR CORPORATION, OR CONVEYING ANY RIGHTS OR PERMISSION TO MANUFACTURE, USE, OR SELL ANY PATENTED INVENTION THAT MAY IN ANY WAY BE RELATED THERETO.

FED SUP CLASS
NONE

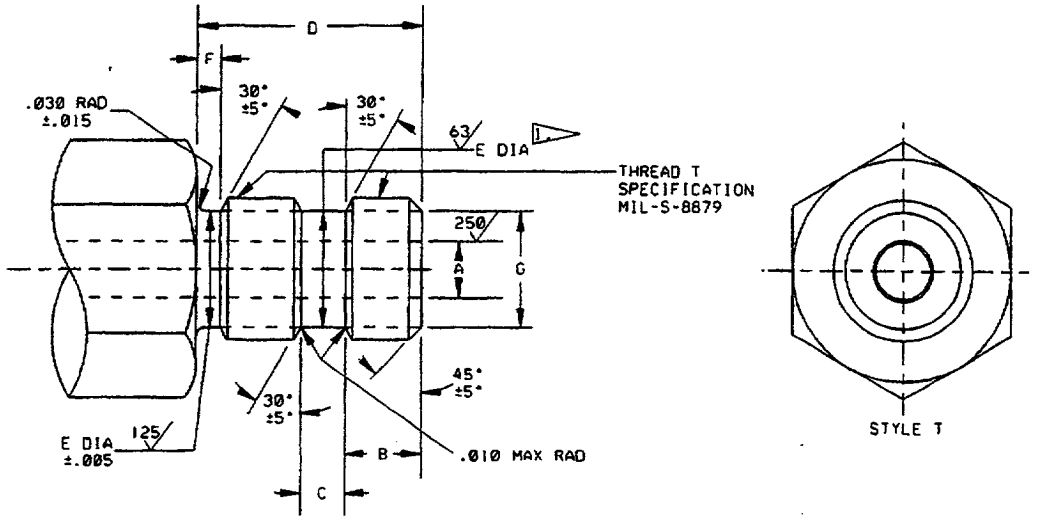

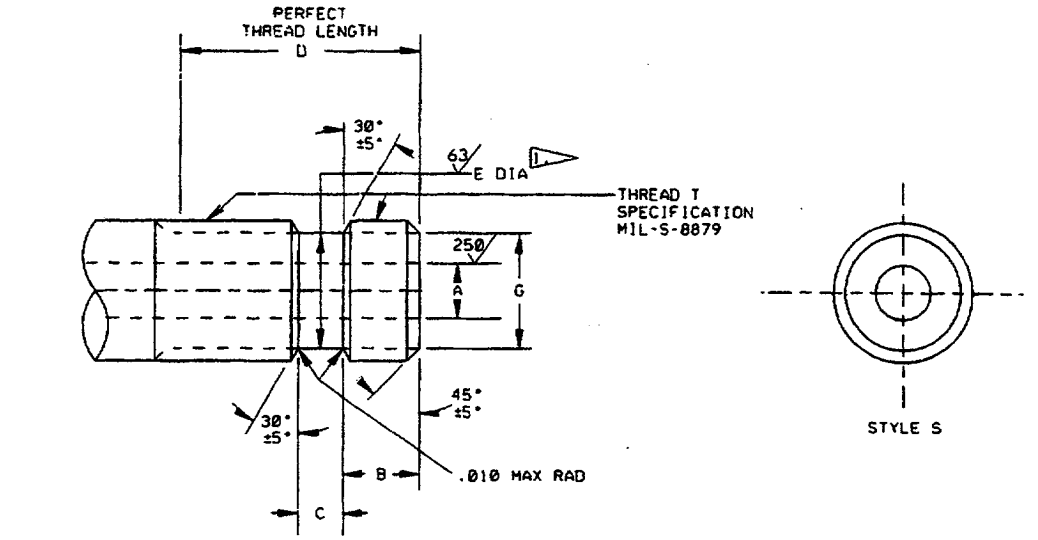

REVISED: (D) REV & REDRAWN 8-1-90

APPROVED: 8-12-65

NOTICE: WHEN GOVERNMENT DRAWINGS, SPECIFICATIONS OR OTHER DATA ARE USED FOR ANY PURPOSE OTHER THAN IN CONNECTION WITH A DEFINITELY RELATED GOVERNMENT PROCUREMENT OPERATION, THE UNITED STATES GOVERNMENT THEREBY INCURS NO RESPONSIBILITY NOR ANY OBLIGATION WHATSOEVER AND THE FACT THAT THE GOVERNMENT MAY HAVE FORMULATED, FURNISHED, OR IN ANY WAY SUPPLIED THE SAID DRAWINGS, SPECIFICATIONS, OR OTHER DATA IS NOT REGARDED BY IMPLICATION OR OTHERWISE AS IN ANY MANNER LICENSING THE HOLDER OR ANY OTHER PERSON OR CORPORATION, OR CONVEYING ANY RIGHTS OR PERMISSION TO MANUFACTURE, USE, OR SELL ANY PATENTED INVENTION THAT MAY IN ANY WAY BE RELATED THERETO.

CUSTODIAN:	JOHN F. KENNEDY SPACE CENTER	
PROCUREMENT SPEC. NONE	FITTING END, ADJUSTABLE, STANDARD DIMENSIONS FOR	DESIGN STANDARD
COORDINATION STATUS KSC DE		KC138
		SHEET 1 OF 2

KSC FORM 32-85 (CG 4/92)

FED SUP CLASS
NONE

DASH NO.	TUBE OD REF	THREAD T MIL-S-8879	A DIA		B DIM	C +.010 -.000	D DIM ±.016	E +.002 -.003	F +.015 -.000	G DIA ±.016
-4	¼	.4375-20-UNJF-3A	.172	+.003 -.004	.281	.140	.703	.364	.075	.359
-6	⅜	.5625-18-UNJF-3A	.297	±.004	.312	.156	.766	.482	.083	.484
-8	½	.7500-16-UNJF-3A	.391		.344	.187	.875	.660	.094	.656
-10	⅝	.8750-14-UNJF-3A	.484		.391	.219	1.016	.773	.107	.766
-12	¾	1.0625-12-UNJ-3A	.609	±.005	.469	.234	1.156	.945	.125	.938
-16	1	1.3125-12-UNJ-3A	.844	+.007 -.005				1.195		1.188
-20	1¼	1.6250-12-UNJ-3A	1.078	+.008 -.005				1.507		1.500
-24	1½	1.8750-12-UNJ-3A	1.312					1.756		1.750
-28	1¾	2.2500-12-UNJ-3A	1.547	+.010 -.005				2.131		2.125
-32	2	2.5000-12-UNJ-3A	1.781					2.381		2.375

NOTES:

1. "E" DIAMETER GROOVE SHALL BE SMOOTH AND FREE OF ALL THREAD MARKS.
2. SURFACE FINISH OF DRILLED HOLE SHALL BE 250√ PER ANSI B46.1.
3. MACHINED SURFACE ROUGHNESS, UNLESS OTHERWISE SPECIFIED, SHALL NOT EXCEED 100√ PER ANSI B46.1.
4. DIMENSIONS IN INCHES, UNLESS OTHERWISE SPECIFIED, TOLERANCES: DECIMALS ±.005.
5. THIS STANDARD TAKES PRECEDENCE OVER DOCUMENTS REFERENCED HEREIN.

REVISED: (D) REV & REDRAWN 8-1-90

APPROVED: 8-12-65

CUSTODIAN: JOHN F. KENNEDY SPACE CENTER

PROCUREMENT SPEC.
NONE

COORDINATION STATUS
KSC DE

FITTING END, ADJUSTABLE, STANDARD DIMENSIONS FOR

DESIGN STANDARD
KC138

SHEET 2 OF 2

KSC FORM 32-85 (CG 4/92)

NOTICE: WHEN GOVERNMENT DRAWINGS, SPECIFICATIONS OR OTHER DATA ARE USED FOR ANY PURPOSE OTHER THAN IN CONNECTION WITH A DEFINITELY RELATED GOVERNMENT PROCUREMENT OPERATION, THE UNITED STATES GOVERNMENT THEREBY INCURS NO RESPONSIBILITY NOR ANY OBLIGATION WHATSOEVER AND THE FACT THAT THE GOVERNMENT MAY HAVE FORMULATED, FURNISHED, OR IN ANY WAY SUPPLIED THE SAID DRAWINGS, SPECIFICATIONS, OR OTHER DATA IS NOT REGARDED BY IMPLICATION OR OTHERWISE AS IN ANY MANNER LICENSING THE HOLDER OR ANY OTHER PERSON OR CORPORATION, OR CONVEYING ANY RIGHTS OR PERMISSION TO MANUFACTURE, USE, OR SELL ANY PATENTED INVENTION THAT MAY IN ANY WAY BE RELATED THERETO.

FED SUP CLASS
4730

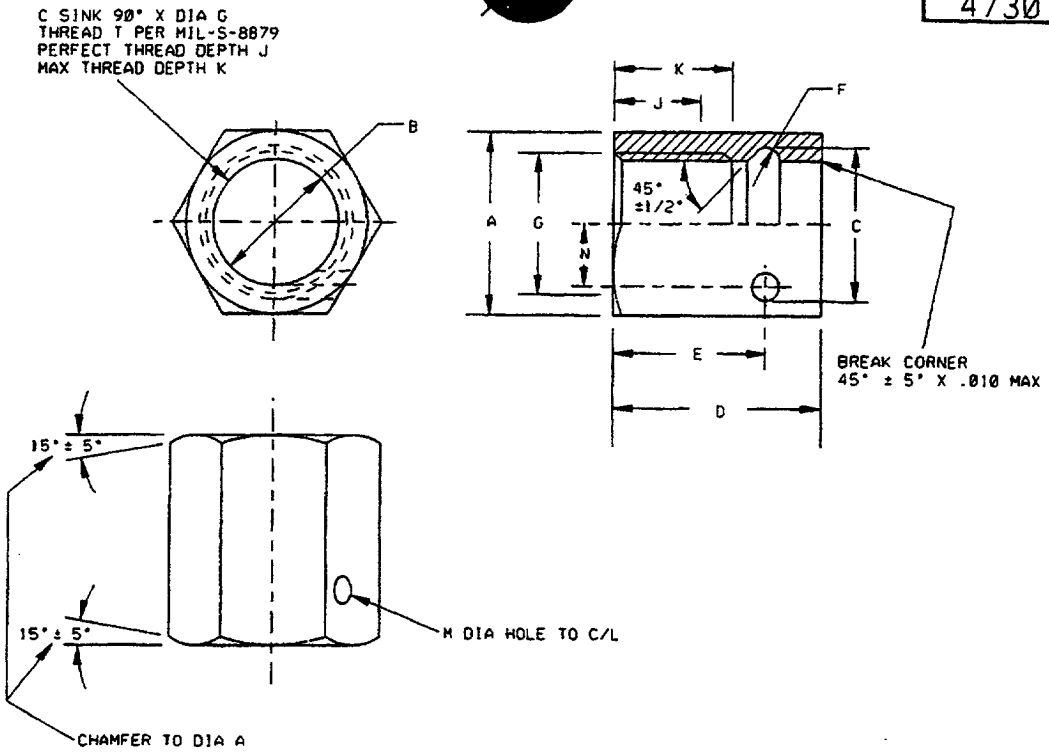

MATERIAL: SEE PROCUREMENT SPECIFICATION.
ALUMINUM ALLOY, 2024-T6, CODE "D"
CORROSION RESISTANT STEEL (CLASS 316), CODE "K" (WAS CODE "C")

FINISH: SEE PROCUREMENT SPECIFICATION

SCREW THREAD: SEE PROCUREMENT SPECIFICATION

NOTES:
1. REMOVE BURRS AND SLIVERS. BREAK SHARP EDGES UNLESS OTHERWISE NOTED.
2. DIMENSIONS IN INCHES. UNLESS OTHERWISE SPECIFIED, TOLERANCE DECIMALS ±.016.
3. FOR DESIGN FEATURE PURPOSES, THIS DRAWING TAKES PRECEDENCE OVER PROCUREMENT DOCUMENTS REFERENCED HEREIN.
4. REFERENCED DOCUMENTS SHALL BE OF THE ISSUE IN EFFECT ON THE DATE OF INVITATION FOR BID.
5. MARKING OF FITTINGS SHALL BE CONSISTENT WITH PROCUREMENT SPECIFICATION USING APPLICABLE KC STANDARD AND PART NUMBER DESIGNATIONS AS SHOWN ON THIS DRAWING.

EXAMPLE OF PART NOS.
KC139K8 = SWIVEL NUT, ½" TUBE FITTING, CORROSION RESISTANT STEEL
KC139D12 = SWIVEL NUT, ¾" TUBE FITTING, ALUMINUM ALLOY

APPROVED: 8-12-65
REVISED: © REV & REDRAWN 8-1-90

CUSTODIAN: JOHN F. KENNEDY SPACE CENTER		
PROCUREMENT SPEC. KSC-F-124	SWIVEL NUT, FLARED TUBE FITTING	STANDARD PART
COORDINATION STATUS KSC DE		KC139
		SHEET 1 OF 2

KSC FORM 32-85 (CG 4/92)

NOTICE: WHEN GOVERNMENT DRAWINGS, SPECIFICATIONS OR OTHER DATA ARE USED FOR ANY PURPOSE OTHER THAN IN CONNECTION WITH A DEFINITELY RELATED GOVERNMENT PROCUREMENT OPERATION, THE UNITED STATES GOVERNMENT THEREBY INCURS NO RESPONSIBILITY NOR ANY OBLIGATION WHATSOEVER AND THE FACT THAT THE GOVERNMENT MAY HAVE FORMULATED, FURNISHED, OR IN ANY WAY SUPPLIED THE SAID DRAWINGS, SPECIFICATIONS, OR OTHER DATA IS NOT REGARDED BY IMPLICATION OR OTHERWISE AS IN ANY MANNER LICENSING THE HOLDER OR ANY OTHER PERSON OR CORPORATION, OR CONVEYING ANY RIGHTS OR PERMISSION TO MANUFACTURE, USE, OR SELL ANY PATENTED INVENTION THAT MAY IN ANY WAY BE RELATED THERETO.

FED SUP CLASS
4730

DASH NO. CRE STEEL	DASH NO. AL ALLOY	TUBE OD REF	THREAD T MIL-S-8879	A HEX		B DIA +.005 -.000	C +.005 -.000	D DIM ±.016	E DIM ±.003	F RAD +.005 -.003	G DIA ±.005	J DIM MIN
K4	D4	1/4	.4375-20UNJF-3B	.563		.388	.474	.656	.484	.044	.438	.300
K6	D6	3/8	.5625-18UNJF-3B	.688		.508	.593	.781	.531		.563	.333
K8	D8	1/2	.7500-16UNJF-3B	.875	+.003 -.004	.688	.785	.828	.609	.050	.750	.375
K10	D10	5/8	.8750-14UNJF-3B	1.000		.804	.901	.875	.687		.875	.461
K12	D12	3/4	1.0625-12UNJ-3B	1.250		.979	1.108	1.016	.781	.066	1.063	.469
K16	D16	1	1.3125-12UNJ-3B	1.500		1.229	1.361	1.094	.844		1.313	.563
K20	D20	1 1/4	1.6250-12UNJ-3B	2.000	±.016	1.541	1.670	1.219	.969		1.625	
K24	D24	1 1/2	1.8750-12UNJ-3B	2.250		1.791	1.920	1.297	1.015		1.875	.661
K28	D28	1 3/4	2.2500-12UNJ-3B	2.625	±.020	2.183	2.314	1.513	1.247		2.250	.730
K32	D32	2	2.5000-12UNJ-3B	2.875		2.416	2.546	1.656	1.344		2.500	.844

DASH NO. CRE STEEL	DASH NO. AL ALLOY	TUBE OD REF	K DIM MAX	M DIA ±.005	N DIM ±.003
K4	D4	1/4	.450	.093	.193
K6	D6	3/8	.500		.253
K8	D8	1/2	.563	.102	.343
K10	D10	5/8	.675		.401
K12	D12	3/4	.719	.134	.488
K16	D16	1	.813		.613
K20	D20	1 1/4			.769
K24	D24	1 1/2	.911		.894
K28	D28	1 3/4	.980		1.091
K32	D32	2	1.094		1.207

REVISED: © REV & REDRAWN 8-1-90

APPROVED: 8-12-65

CUSTODIAN: JOHN F. KENNEDY SPACE CENTER

PROCUREMENT SPEC. KSC-F-124

COORDINATION STATUS KSC DE

SWIVEL NUT, FLARED TUBE FITTING

STANDARD PART

KC139

SHEET 2 OF 2

KSC FORM 32-85 (CG 4/92)

NOTICE: WHEN GOVERNMENT DRAWINGS, SPECIFICATIONS OR OTHER DATA ARE USED FOR ANY PURPOSE OTHER THAN IN CONNECTION WITH A DEFINITELY RELATED GOVERNMENT PROCUREMENT OPERATION, THE UNITED STATES GOVERNMENT THEREBY INCURS NO RESPONSIBILITY NOR ANY OBLIGATION WHATSOEVER AND THE FACT THAT THE GOVERNMENT MAY HAVE FORMULATED, FURNISHED, OR IN ANY WAY SUPPLIED THE SAID DRAWINGS, SPECIFICATIONS, OR OTHER DATA IS NOT REGARDED BY IMPLICATION OR OTHERWISE AS IN ANY MANNER LICENSING THE HOLDER OR ANY OTHER PERSON OR CORPORATION, OR CONVEYING ANY RIGHTS OR PERMISSION TO MANUFACTURE, USE, OR SELL ANY PATENTED INVENTION THAT MAY IN ANY WAY BE RELATED THERETO.

FED SUP CLASS
NONE

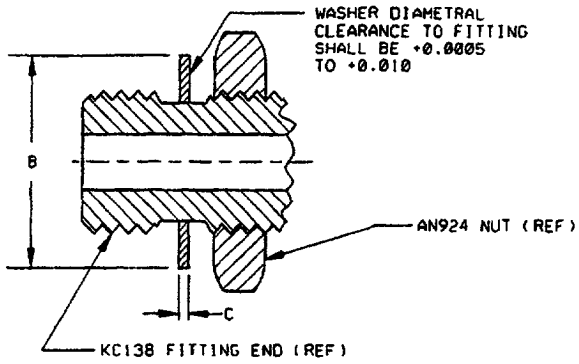

DASH NO. CRE STEEL	DASH NO. AL ALLOY	C DIM STOCK THK ±.003	FINAL ASSY DIM. FOR B ±.015	FLATNESS TOL "D" 5
C4	D4	.031	.650	.015
C6	D6		.794	
C8	D8	.040	1.010	.020
C10	D10	.050	1.155	.025
C12	D12		1.444	
C16	D16		1.732	
C20	D20		2.165	
C24	D24		2.454	
C28	D28		2.868	
C32	D32		3.160	

MATERIAL: ALUMINUM ALLOY, CODE "D"; TYPE 2024-T3 OF SPECIFICATION QQ-A-250/4; CORROSION RESISTANT STEEL (CLASS 302 OR 304) CONDITION A OF SPECIFICATION QQ-S-766.

NOTES:

1. REMOVE BURRS AND SLIVERS. BREAK SHARP EDGES UNLESS OTHERWISE NOTED.
2. DIMENSIONS IN INCHES; TOLERANCES NOTED.
3. FOR DESIGN FEATURE PURPOSES, THIS DRAWING TAKES PRECEDENCE OVER PROCUREMENT DOCUMENTS REFERENCED HEREIN.
4. REFERENCED DOCUMENTS SHALL BE OF THE ISSUE IN EFFECT ON DATE OF INVITATION FOR BID.

5 WASHER SHALL BE FLAT WITHIN "D" AFTER INSTALLATION ON FITTING END.

EXAMPLE OF PART NOS.

KC140C4 = CORROSION RESISTANT STEEL WASHER FOR ¼" OD TUBE ADJ END FITTING

KC140D6 = ALUMINUM ALLOY WASHER FOR ½" OD TUBE ADJ END FITTING

APPROVED: 8-12-65 REVISED: (G) REV & REDRAWN 8-1-90

CUSTODIAN: JOHN F. KENNEDY SPACE CENTER

PROCUREMENT SPEC. KSC-F-124

COORDINATION STATUS KSC DE

WASHER
FLARED TUBE FITTING
ADJUSTABLE END

STANDARD PART

KC140

SHEET 1 OF 1

KSC FORM 32-85 (CG 4/92)

NOTICE: WHEN GOVERNMENT DRAWINGS, SPECIFICATIONS OR OTHER DATA ARE USED FOR ANY PURPOSE OTHER THAN IN CONNECTION WITH A DEFINITELY RELATED GOVERNMENT PROCUREMENT OPERATION, THE UNITED STATES GOVERNMENT THEREBY INCURS NO RESPONSIBILITY NOR ANY OBLIGATION WHATSOEVER AND THE FACT THAT THE GOVERNMENT MAY HAVE FORMULATED, FURNISHED, OR IN ANY WAY SUPPLIED THE SAID DRAWINGS, SPECIFICATIONS, OR OTHER DATA IS NOT REGARDED BY IMPLICATION OR OTHERWISE AS IN ANY MANNER LICENSING THE HOLDER OR ANY OTHER PERSON OR CORPORATION, OR CONVEYING ANY RIGHTS OR PERMISSION TO MANUFACTURE, USE, OR SELL ANY PATENTED INVENTION THAT MAY IN ANY WAY BE RELATED THERETO.

FED SUP CLASS
NONE

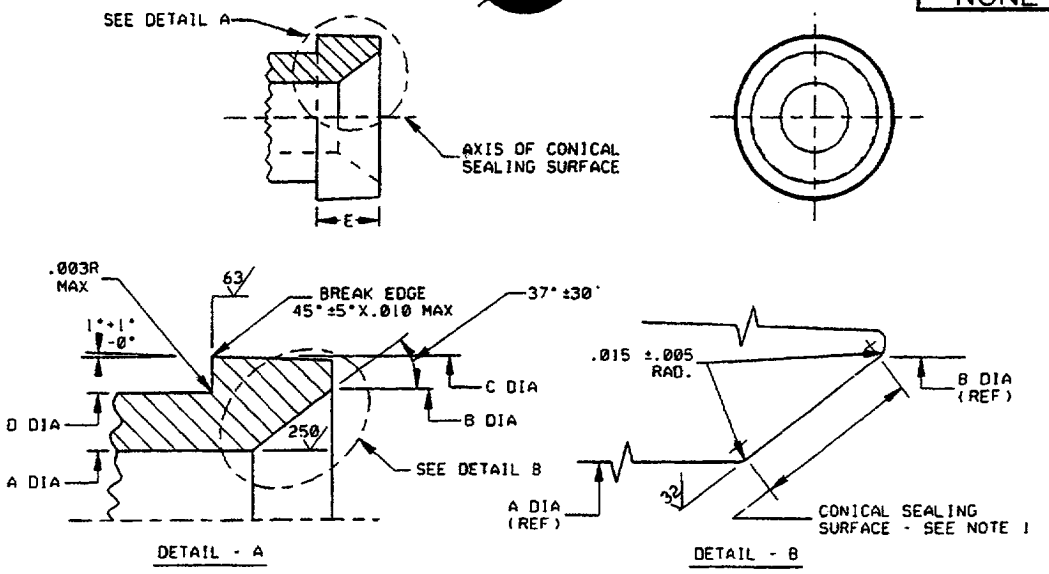

DASH NO.	TUBE OD REF	A DIA ±.005	B DIA ±.005	C DIA +.003 -.000	D DIA ±.001	E DIM	
-4	¼	.162	.302	.380	.296	.141	±.005
-6	⅜	.286	.442	.499	.431	.171	±.007
-8	½	.388	.582	.679	.561	.218	±.010
-10	⅝	.474	.720	.794	.689	.234	
-12	¾	.583	.862	.969	.825	.266	±.015
-16	1	.786	1.110	1.219	1.080	.281	
-20	1¼	1.036	1.428	1.533	1.338	.312	
-24	1½	1.281	1.685	1.783	1.608	.344	
-28	1¾	1.578	2.073	2.158	1.881	.375	
-32	2	1.750	2.245	2.408	2.158	.406	

NOTES:

1. THE CONICAL SEALING SURFACE SHALL BE CONCENTRIC WITH D DIAMETER WITHIN .005 FULL INDICATOR READING.
2. MACHINED SURFACE ROUGHNESS, UNLESS OTHERWISE SPECIFIED, SHALL NOT EXCEED 63 PER ANSI B46.1.
3. DIMENSIONS IN INCHES UNLESS OTHERWISE SPECIFIED; ANGLES ±5°.
4. BREAK ALL SHARP EDGES UNLESS OTHERWISE NOTED. REMOVE BURRS AND SLIVERS.
5. THIS STANDARD TAKES PRECEDENCE OVER DOCUMENTS REFERENCED HEREIN.

REVISED: (E) REV & REDRAWN 8-1-90

APPROVED: 8-12-65

CUSTODIAN: JOHN F. KENNEDY SPACE CENTER

PROCUREMENT SPEC. NONE

COORDINATION STATUS KSC DE

CONICAL END, STANDARD DEMINSIONS FOR

DESIGN STANDARD KC141

SHEET 1 OF 1

KSC FORM 32-85 (CG 4/92)

NOTICE: WHEN GOVERNMENT DRAWINGS, SPECIFICATIONS OR OTHER DATA ARE USED FOR ANY PURPOSE OTHER THAN IN CONNECTION WITH A DEFINITELY RELATED GOVERNMENT PROCUREMENT OPERATION, THE UNITED STATES GOVERNMENT THEREBY INCURS NO RESPONSIBILITY NOR ANY OBLIGATION WHATSOEVER AND THE FACT THAT THE GOVERNMENT MAY HAVE FORMULATED, FURNISHED, OR IN ANY WAY SUPPLIED THE SAID DRAWINGS, SPECIFICATIONS, OR OTHER DATA IS NOT REGARDED BY IMPLICATION OR OTHERWISE AS IN ANY MANNER LICENSING THE HOLDER OR ANY OTHER PERSON OR CORPORATION, OR CONVEYING ANY RIGHTS OR PERMISSION TO MANUFACTURE, USE, OR SELL ANY PATENTED INVENTION THAT MAY IN ANY WAY BE RELATED THERETO.

FED SUP CLASS
4730

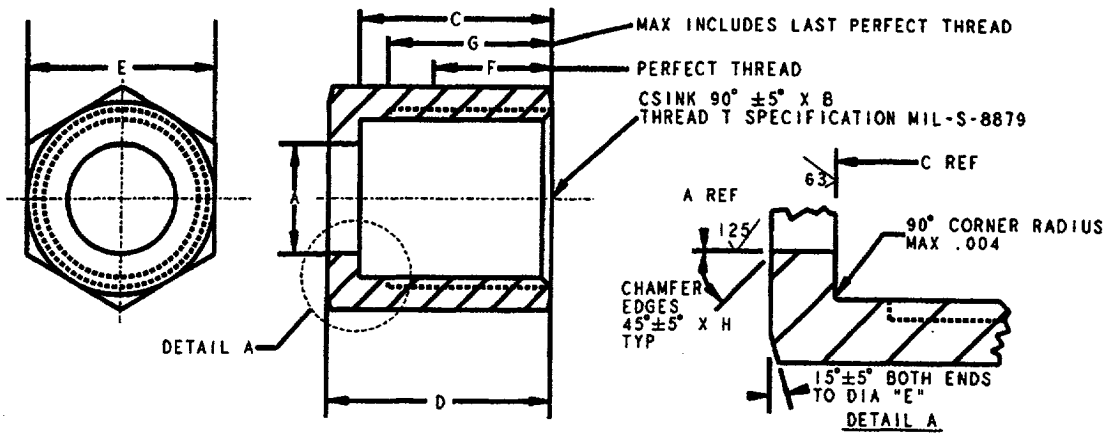

DASH NO. 316 STEEL	DASH NO. AL ALLOY	DASH NO. AL6XN	TUBE OD REF	THREAD T MIL-S-8879	A DIA +.003 -.000	B DIA ±.005	C DIM ±.005	D DIM ±.005	E DIM		F MIN	G MAX	H +.005 -.000
K2	D2	L2	1/8	.3125-24UNJF-3B	.180	.313	.460	.542	.375	+.003 -.004	.251	.376	.005
K3	D3	L3	3/16	.3750-24UNJF-3B	.242	.375	.506	.604	.438		.282	.407	
K4	D4	L4	1/4	.4375-20UNJF-3B	.305	.438	.532	.620	.563		.300	.450	
K5	D5	L5	5/16	.5000-20UNJF-3B	.374	.500	.579	.683	.625		.331	.481	
K6	D6	L6	3/8	.5625-18UNJF-3B	.440	.563	.603	.729	.688		.333	.500	
K8	D8	L8	1/2	.7500-16UNJF-3B	.570	.750	.723	.854	.875		.375	.563	.010
K10	D10	L10	5/8	.8750-14UNJF-3B	.698	.875	817	.979	1.000		.461	.675	
K12	D12	L12	3/4	1.0625-12UNJF-3B	.834	1.063	.868	1.026	1.250		.469	.719	
K16	D16	L16	1	1.3125-12UNJF-3B	1.089	1.313	.962	1.136	1.500		.563	.813	
K20	D20	L20	1-1/4	1.6250-12UNJF-3B	1.347	1.625	1.017	1.229	2.000	±.016			
K24	D24	L24	1-1/2	1.8750-12UNJF-3B	1.617	1.875	1.170	1.417	2.250	±.020	.661	.911	
K28	D28	L28	1-3/4	2.2500-12UNJF-3B	1.890	2.250	1.316	1.563	2.625		.730	.980	.015
K32	D32	L32	2	2.5000-12UNJF-3B	2.167	2.500	1.462	1.734	2.875		.844	1.094	

MATERIAL: SEE PROCUREMENT SPECIFICATION.
ALUMINUM ALLOY, 2024-T6, CODE "D"
CORROSION RESISTANT STEEL (CLASS 316), CODE "K" (WAS CODE "C")
CORROSION RESISTANT STEEL (AL6XN), CODE "L" PER ASTM -B691

FINISH: SEE PROCUREMENT SPECIFICATION

SCREW THREAD: SEE PROCUREMENT SPECIFICATION

NOTES:
1. REMOVE BURRS AND SLIVERS. BREAK SHARP EDGES UNLESS OTHERWISE NOTED.
2. DIMENSIONS IN INCHES. UNLESS OTHERWISE SPECIFIED, TOLERANCE DECIMALS ±.016.
3. FOR DESIGN FEATURE PURPOSES, THIS DRAWING TAKES PRECEDENCE OVER PROCUREMENT DOCUMENTS REFERENCED HEREIN.
4. REFERENCED DOCUMENTS SHALL BE OF THE ISSUE IN EFFECT ON THE DATE OF INVITATION FOR BID.
5. MARKING OF FITTINGS SHALL BE CONSISTENT WITH PROCUREMENT SPECIFICATION USING APPLICABLE KC STANDARD AND PART NUMBER DESIGNATIONS AS SHOWN ON THIS DRAWING.
6. DIMENSION A AND THREAD T (PITCH DIAMETER) TO BE CONCENTRIC WITHIN .005 FULL INDICATOR READING.
7. AFTER MACHINING, THE CODE L FITTINGS SHALL BE PICKLED IN ACCORDANCE WITH ASTM A380 CODE B AND THEN PASSIVATED IN ACCORDANCE WITH SAE-AMS-2700 METHOD I TYPE 6, EXCEPT THAT 20% TO 25% NITRIC ACID SOLUTION SHALL BE USED. A TEST FOR SURFACE PASSIVITY SHALL BE DONE IN ACCORDANCE WITH SAE-AMS-2700 TEST METHOD 102 - COPPER SULFATE TEST.

EXAMPLE OF PART NOS.
KC142K8 = NUT, COUPLING, 1/2" TUBE FITTING, TYPE 316 SS
KC142D12 = NUT, COUPLING, 3/4" TUBE FITTING, ALUMINUM ALLOY
KC142L16 = NUT, COUPLING, 1" TUBE FITTING, AL6XN

REVISED: ADDED CODE "L" MATERIAL AND NOTE 7 5-1-87
APPROVED: 8-12-65

CUSTODIAN: JOHN F. KENNEDY SPACE CENTER

PROCUREMENT SPEC. KSC-F-124

COORDINATION STATUS KSC DE

NUT, COUPLING

STANDARD PART
KC142

SHEET 1 OF 1

KSC FORM 32-85 (CG 4/92)

NOTICE: WHEN GOVERNMENT DRAWINGS, SPECIFICATIONS OR OTHER DATA ARE USED FOR ANY PURPOSE OTHER THAN IN CONNECTION WITH A DEFINITELY RELATED GOVERNMENT PROCUREMENT OPERATION, THE UNITED STATES GOVERNMENT THEREBY INCURS NO RESPONSIBILITY NOR ANY OBLIGATION WHATSOEVER AND THE FACT THAT THE GOVERNMENT MAY HAVE FORMULATED, FURNISHED, OR IN ANY WAY SUPPLIED THE SAID DRAWINGS, SPECIFICATIONS, OR OTHER DATA IS NOT REGARDED BY IMPLICATION OR OTHERWISE AS IN ANY MANNER LICENSING THE HOLDER OR ANY OTHER PERSON OR CORPORATION, OR CONVEYING ANY RIGHTS OR PERMISSION TO MANUFACTURE, USE, OR SELL ANY PATENTED INVENTION THAT MAY IN ANY WAY BE RELATED THERETO.

FED SUP CLASS
4730

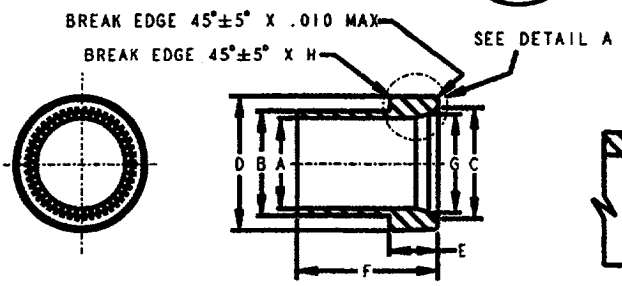

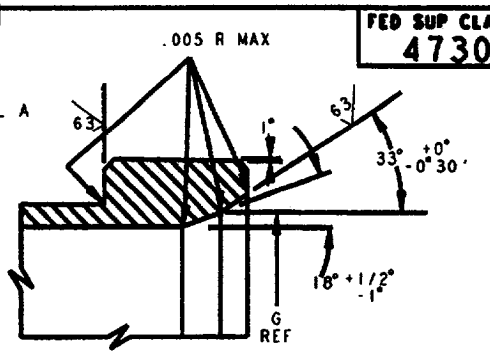

DETAIL A ENLARGED

DASH NO. 316 STEEL	DASH NO. AL ALLOY	DASH NO. AL6XN	TUBE OD REF	A DIA +.003 -.000	B DIA +.000 -.003	C DIA ±.002	D DIA +.000 -.003	E ±.005	F ±.016	G DIA +.000 -.005	H MAX	H MIN
K2	D2	L2	1/8	.130	.172	.205	.267	.125	.344	.178	.010	.005
K3	D3	L3	3/16	.193	.234	.267	.329	.141	.406	.240		
K4	D4	L4	1/4	.255	.297	.315	.383	.141	.406	.280		
K5	D5	L5	5/16	.318	.366	.375	.445	.156	.438	.348		
K6	D6	L6	3/8	.380	.432	.441	.502	.172	.500	.406		
K8	D8	L8	1/2	.506	.562	.589	.682	.219	.562	.538	.015	
K10	D10	L10	5/8	.631	.690	.705	.797	.234	.656	.663		
K12	D12	L12	3/4	.756	.826	.880	.972	.266	.688	.794		
K16	D16	L16	1	1.006	1.081	1.130	1.222	.281	.781	1.050		
K20	D20	L20	1-1/4	1.260	1.339	1.412	1.534	.312	.906	1.310		
K24	D24	L24	1-1/2	1.510	1.609	1.630	1.784	.344	1.125	1.564		
K28	D28	L28	1-3/4	1.762	1.882	1.945	2.159	.375	1.125	1.818		
K32	D32	L32	2	2.014	2.159	2.195	2.409	.406	1.188	2.070		

MATERIAL: SEE PROCUREMENT SPECIFICATION.
ALUMINUM ALLOY, 2024-T6, CODE "D"
CORROSION RESISTANT STEEL (CLASS 316), CODE "K" (WAS CODE "C")
CORROSION RESISTANT STEEL (AL6XN), CODE "L" PER ASTM -B691

FINISH: SEE PROCUREMENT SPECIFICATION.

SCREW THREAD: SEE PROCUREMENT SPECIFICATION.

NOTES:
1. REMOVE BURRS AND SLIVERS. BREAK SHARP EDGES UNLESS OTHERWISE NOTED.
2. DIMENSIONS IN INCHES. UNLESS OTHERWISE SPECIFIED, TOLERANCE DECIMALS ±.016. ANGLES ±1/2°.
3. FOR DESIGN FEATURE PURPOSES, THIS DRAWING TAKES PRECEDENCE OVER PROCUREMENT DOCUMENTS REFERENCED HEREIN.
4. REFERENCED DOCUMENTS SHALL BE OF THE ISSUE IN EFFECT ON THE DATE OF INVITATION FOR BID.
5. MARKING OF FITTINGS SHALL BE CONSISTENT WITH PROCUREMENT SPECIFICATION USING APPLICABLE KC STANDARD AND PART NUMBER DESIGNATIONS AS SHOWN ON THIS DRAWING.
6. SURFACE ROUGHNESS VALUES NOT INDICATED ON DRAWING SHALL NOT EXCEED 125 PER ANSI B46.1.
7. DIMENSIONS A, B, C, AND D SHALL BE CONCENTRIC WITHIN .005 FULL INDICATOR READING FOR TUBE SIZES UP TO AND INCLUDING 3/4" AND .010 FULL INDICATOR READING FOR SIZES 1" AND ABOVE.
8. AFTER MACHINING, THE CODE L FITTINGS SHALL BE PICKLED IN ACCORDANCE WITH ASTM A380 CODE B AND THEN PASSIVATED IN ACCORDANCE WITH SAE-AMS-2700 METHOD I TYPE 6, EXCEPT THAT 20% TO 25% NITRIC ACID SOLUTION SHALL BE USED. A TEST FOR SURFACE PASSIVITY SHALL BE DONE IN ACCORDANCE WITH SAE-AMS-2700 TEST METHOD 102 - COPPER SULFATE TEST.

EXAMPLE OF PART NOS.
KC143K8 = SLEEVE, 1/2" OD TUBING, TYPE 316 SS
KC143D12 = SLEEVE, 3/4" OD TUBING, ALUMINUM ALLOY
KC143L16 = SLEEVE, 1" OD TUBING, AL6XN

REVISED: ADDED CODE "L" - MATERIAL AND NOTE 8 5-1-07

APPROVED: 8-12-65

CUSTODIAN: JOHN F. KENNEDY SPACE CENTER

PROCUREMENT SPEC. KSC-F-124

COORDINATION STATUS KSC DE

SLEEVE, FLARED TUBE FITTING

STANDARD PART

KC143

SHEET 1 OF 1

KSC FORM 32-85 (CG 4/92)

NOTICE: WHEN GOVERNMENT DRAWINGS, SPECIFICATIONS OR OTHER DATA ARE USED FOR ANY PURPOSE OTHER THAN IN CONNECTION WITH A DEFINITELY RELATED GOVERNMENT PROCUREMENT OPERATION, THE UNITED STATES GOVERNMENT THEREBY INCURS NO RESPONSIBILITY NOR ANY OBLIGATION WHATSOEVER AND THE FACT THAT THE GOVERNMENT MAY HAVE FORMULATED, FURNISHED, OR IN ANY WAY SUPPLIED THE SAID DRAWINGS, SPECIFICATIONS, OR OTHER DATA IS NOT REGARDED BY IMPLICATION OR OTHERWISE AS IN ANY MANNER LICENSING THE HOLDER OR ANY OTHER PERSON OR CORPORATION, OR CONVEYING ANY RIGHTS OR PERMISSION TO MANUFACTURE, USE, OR SELL ANY PATENTED INVENTION THAT MAY IN ANY WAY BE RELATED THERETO.

FED SUP CLASS 4730

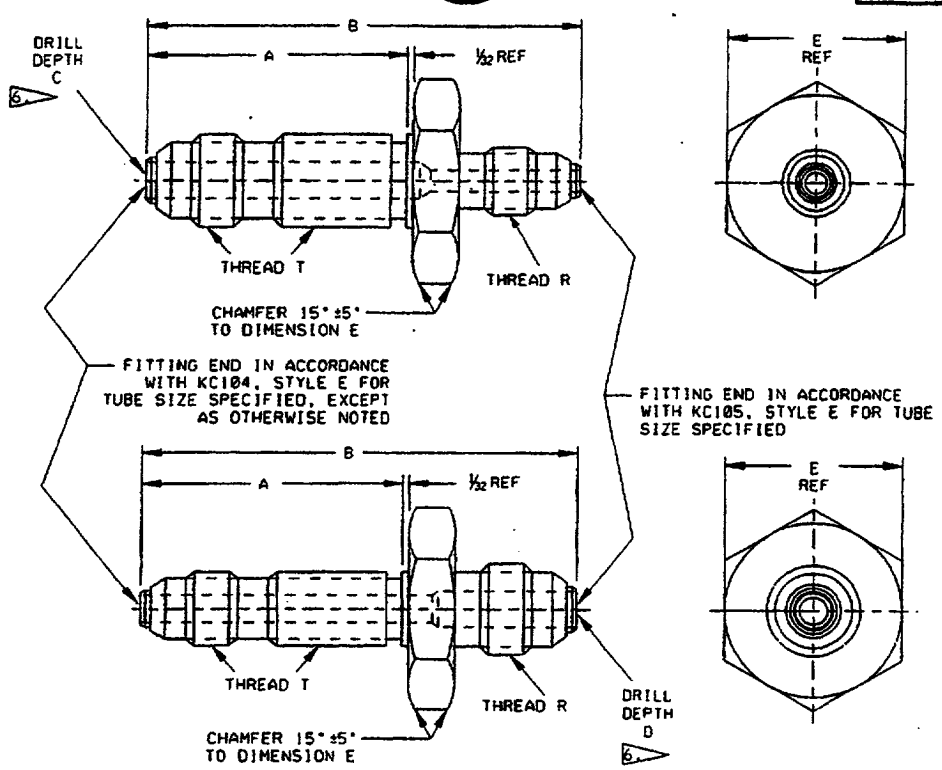

MATERIAL: SEE PROCUREMENT SPECIFICATION.
ALUMINUM ALLOY, 2024-T6, CODE "D"
CORROSION RESISTANT STEEL (CLASS 316), CODE "K" (WAS CODE "C")

FINISH: SEE PROCUREMENT SPECIFICATION.

SCREW THREAD: SEE PROCUREMENT SPECIFICATION.

NOTES:
1. REMOVE BURRS AND SLIVERS. BREAK SHARP EDGES UNLESS OTHERWISE NOTED.
2. DIMENSIONS IN INCHES. UNLESS OTHERWISE SPECIFIED, TOLERANCE DECIMALS ±.016.
3. FOR DESIGN FEATURE PURPOSES, THIS DRAWING TAKES PRECEDENCE OVER PROCUREMENT DOCUMENTS REFERENCED HEREIN.
4. REFERENCED DOCUMENTS SHALL BE OF THE ISSUE IN EFFECT ON THE DATE OF INVITATION FOR BID.
5. MARKING OF FITTINGS SHALL BE CONSISTENT WITH PROCUREMENT SPECIFICATION USING APPLICABLE KC STANDARD AND PART NUMBER DESIGNATIONS AS SHOWN ON THIS DRAWING.

6 AT THE OPTION OF THE MANUFACTURER, THE SMALLER INSIDE DIAMETER DIMENSION MAY BE DRILLED FROM PORT TO PORT

EXAMPLE OF PART NOS.
KC14410-6 = REDUCER, BULKHEAD END: $\frac{3}{8}$" TUBING SHORT END: $\frac{3}{8}$" TUBING CORROSION RESISTANT STEEL.
KC144D12-8 = REDUCER, BULKHEAD END: $\frac{3}{4}$" TUBING SHORT END: $\frac{1}{2}$" TUBING ALUMINUM ALLOY.

APPROVED: 8-12-65 REVISED: (E) REV & REDRAWN 8-1-90 (F) REV. SH. 2 9-1-97

CUSTODIAN: JOHN F. KENNEDY SPACE CENTER		
PROCUREMENT SPEC. KSC-F-124	REDUCER, FLARED TUBE ⅜" BULKHEAD AND UNIVERSAL FOR SEAL RING	STANDARD PART KC144
COORDINATION STATUS KSC DE		SHEET 1 OF 3

KSC FORM 32-85 (CG 4/92)

NOTICE: WHEN GOVERNMENT DRAWINGS, SPECIFICATIONS OR OTHER DATA ARE USED FOR ANY PURPOSE OTHER THAN IN CONNECTION WITH A DEFINITELY RELATED GOVERNMENT PROCUREMENT OPERATION, THE UNITED STATES GOVERNMENT THEREBY INCURS NO RESPONSIBILITY NOR ANY OBLIGATION WHATSOEVER AND THE FACT THAT THE GOVERNMENT MAY HAVE FORMULATED, FURNISHED, OR IN ANY WAY SUPPLIED THE SAID DRAWINGS, SPECIFICATIONS, OR OTHER DATA IS NOT REGARDED BY IMPLICATION OR OTHERWISE AS IN ANY MANNER LICENSING THE HOLDER OR ANY OTHER PERSON OR CORPORATION, OR CONVEYING ANY RIGHTS OR PERMISSION TO MANUFACTURE, USE, OR SELL ANY PATENTED INVENTION THAT MAY IN ANY WAY BE RELATED THERETO.

FED SUP CLASS
4730

DASH NO.		BULKHEAD END		SHORT END		A	B	C	D	E
CRES STEEL	AL ALLOY	TUBE OD REF	THREAD T REF	TUBE OD REF	THREAD R REF	+.000 -.045	+.000 -.090	MAX	MAX	REF
K4-6	D4-6	¼	7/16-20	⅜	9/16-18	1.208	2.147		.457	.813
K4-8	D4-8			½	3/4-16		2.225		.538	1.000
K4-10	D4-10			⅝	7/8-14		2.350		.618	1.125
K4-12	D4-12			¾	1-1/6-12		2.491		.703	1.375
K4-16	D4-16			1	1-5/16-12		2.538		.741	1.625
K4-20	D4-20			1-1/4	1-5/8-12		2.569		.778	1.875
K6-4	D6-4	⅜	9/16-18	¼	7/16-20	1.286	2.219	.883		.813
K6-8	D6-8			½	3/4-16		2.303		.538	1.000
K6-10	D6-10			⅝	7/8-14		2.428		.618	1.125
K6-12	D6-12			¾	1-1/16-12		2.569		.703	1.375
K8-4	D8-4	½	3/4-16	¼	7/16-20	1.442	2.352	1.008		1.000
K8-6	D8-6			⅜	9/16-18		2.358	1.008		
K8-10	D8-10			⅝	7/8-14		2.584		.618	1.125
K8-12	D8-12			¾	1-1/16-12		2.725		.703	1.375
K8-16	D8-16			1	1-5/16-12		2.772		.741	1.625
K10-4	D10-4	⅝	7/8-14	¼	7/16-20	1.583	2.517	1.121		1.125
K10-6	D10-6			⅜	9/16-18		2.523	1.121		
K10-8	D10-8			½	3/4-16		2.624	1.121		
K10-12	D10-12			¾	1-1/16-12		2.866		.703	1.375
K10-16	D10-16			1	1-5/16-12		2.913		.741	1.625
K12-4	D12-4	¾	1-1/6-12	¼	7/16-20	1.755	2.723	1.258		1.375
K12-6	D12-6			⅜	9/16-18		2.729	1.258		
K12-8	D12-8			½	3/4-16		2.830	1.258		
K12-10	D12-10			⅝	7/8-14		2.931	1.258		
K12-16	D12-16			1	1-5/16-12		3.084		.741	1.625
K12-20	D12-20			1¼	1-5/8-12		3.115		.778	1.875
K16-4	D16-4	1	1-5/16-12	¼	7/16-20	1.755	2.723	1.258		1.625
K16-8	D16-8			½	3/4-16		2.830	1.258		
K16-10	D16-10			⅝	7/8-14		2.931	1.258		
K16-12	D16-12			¾	1-1/16-12		3.037	1.258		
K16-20	D16-20			1¼	1-5/8-12		3.115		.778	1.875
K16-24	D16-24			1½	1-7/8-12		3.256		.878	2.125

APPROVED: 8-12-65 REVISED: Ⓔ REV & REDRAWN 8-1-90 Ⓕ REV. DIM. C ON -4 & -6 9-1-97

CUSTODIAN: JOHN F. KENNEDY SPACE CENTER

PROCUREMENT SPEC. KSC-F-124

COORDINATION STATUS KSC DE

REDUCER, FLARED TUBE
⅜" BULKHEAD AND UNIVERSAL
FOR SEAL RING

STANDARD PART
KC144

SHEET 2 OF 3

KSC FORM 32-85 (CG 4/92)

NOTICE: WHEN GOVERNMENT DRAWINGS, SPECIFICATIONS OR OTHER DATA ARE USED FOR ANY PURPOSE OTHER THAN IN CONNECTION WITH A DEFINITELY RELATED GOVERNMENT PROCUREMENT OPERATION, THE UNITED STATES GOVERNMENT THEREBY INCURS NO RESPONSIBILITY NOR ANY OBLIGATION WHATSOEVER AND THE FACT THAT THE GOVERNMENT MAY HAVE FORMULATED, FURNISHED, OR IN ANY WAY SUPPLIED THE SAID DRAWINGS, SPECIFICATIONS, OR OTHER DATA IS NOT REGARDED BY IMPLICATION OR OTHERWISE AS IN ANY MANNER LICENSING THE HOLDER OR ANY OTHER PERSON OR CORPORATION, OR CONVEYING ANY RIGHTS OR PERMISSION TO MANUFACTURE, USE, OR SELL ANY PATENTED INVENTION THAT MAY IN ANY WAY BE RELATED THERETO.

FED SUP CLASS
4730

DASH NO.		BULKHEAD END		SHORT END				6.	6.	
CRES STEEL	AL ALLOY	TUBE OD REF	THREAD T REF	TUBE OD REF	THREAD R REF	A +.000 -.045	B +.000 -.090	C MAX	D MAX	E REF
K20-4	D20-4	1¼	1-5/8-12	¼	7/16-20	1.802	2.754	1.295		1.875
K20-12	D20-12			¾	1-1/16-12		3.068	1.295		
K20-16	D20-16			1	1-5/16-12		3.015	1.295		
K20-24	D20-24			1½	1-7/8-12		3.303		.878	2.125
K24-16	D24-16	1½	1-7/8-12	1	1-5/16-12	1.817	3.147	1.308		
K24-20	D24-20			1¼	1-5/8-12		3.194	1.308		
K28-20	D28-20	1¾	2-1/4-12	1¼	1-5/8-12	1.973	3.379	1.433		2.500
K28-24	D28-24			1½	1-7/8-12		3.504	1.433		
K32-24	D32-24	2	2-1/2-12	1½	1-7/8-12	2.098	3.629	1.533		2.750
K32-28	D32-28			1¾	2-1/4-12		3.754	1.533		

APPROVED: 8-12-65 REVISED: Ⓔ REV & REDRAWN 8-1-90 Ⓕ REV. SH. 2 9-1-97

CUSTODIAN: JOHN F. KENNEDY SPACE CENTER

PROCUREMENT SPEC. KSC-F-124

COORDINATION STATUS KSC DE

REDUCER, FLARED TUBE ⅜" BULKHEAD AND UNIVERSAL FOR SEAL RING

STANDARD PART

KC144

SHEET 3 OF 3

KSC FORM 32-85 (CG 4/92)

NOTICE: WHEN GOVERNMENT DRAWINGS, SPECIFICATIONS OR OTHER DATA ARE USED FOR ANY PURPOSE OTHER THAN IN CONNECTION WITH A DEFINITELY RELATED GOVERNMENT PROCUREMENT OPERATION, THE UNITED STATES GOVERNMENT THEREBY INCURS NO RESPONSIBILITY NOR ANY OBLIGATION WHATSOEVER AND THE FACT THAT THE GOVERNMENT MAY HAVE FORMULATED, FURNISHED, OR IN ANY WAY SUPPLIED THE SAID DRAWINGS, SPECIFICATIONS, OR OTHER DATA IS NOT REGARDED BY IMPLICATION OR OTHERWISE AS IN ANY MANNER LICENSING THE HOLDER OR ANY OTHER PERSON OR CORPORATION, OR CONVEYING ANY RIGHTS OR PERMISSION TO MANUFACTURE, USE, OR SELL ANY PATENTED INVENTION THAT MAY IN ANY WAY BE RELATED THERETO.

FED SUP CLASS
4730

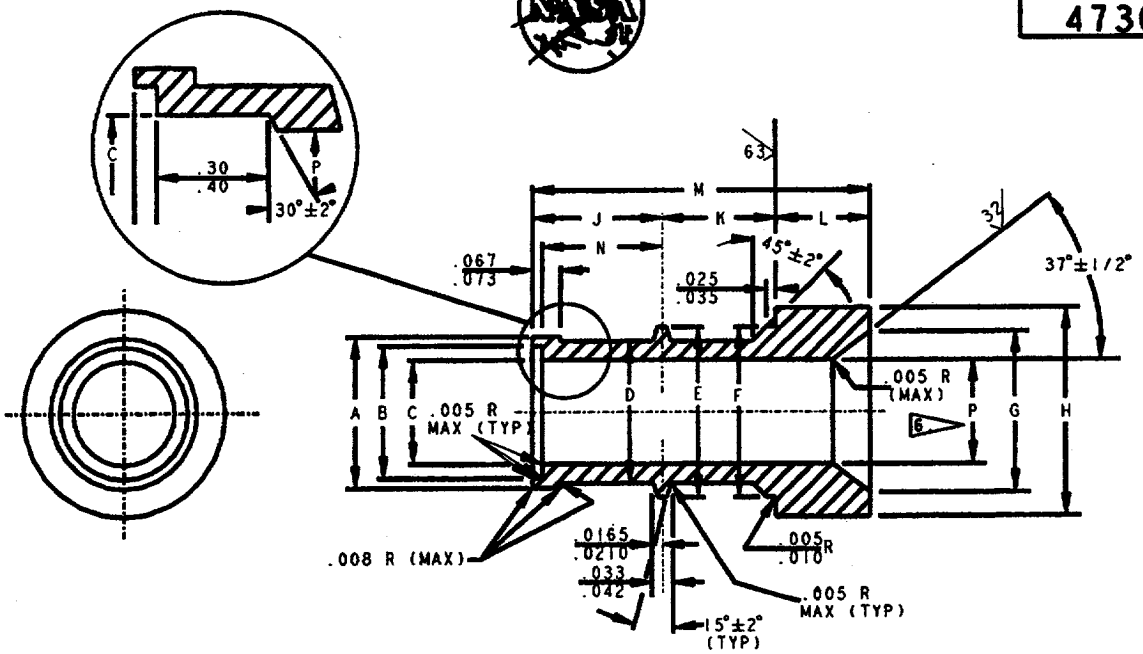

SCHEDULE:

ADD "A" AFTER DASH NUMBER TO DENOTE .035" TUBE WALL.
ADD "B" AFTER DASH NUMBER TO DENOTE .049" TUBE WALL.
ADD "C" AFTER DASH NUMBER TO DENOTE .058" TUBE WALL.
ADD "D" AFTER DASH NUMBER TO DENOTE .065" TUBE WALL.
ADD "E" AFTER DASH NUMBER TO DENOTE .072" TUBE WALL.
ADD "F" AFTER DASH NUMBER TO DENOTE .095" TUBE WALL.
ADD "G" AFTER DASH NUMBER TO DENOTE .109" TUBE WALL.
ADD "H" AFTER DASH NUMBER TO DENOTE .120" TUBE WALL
ADD "J" AFTER DASH NUMBER TO DENOTE .134" TUBE WALL.
ADD "K" AFTER DASH NUMBER TO DENOTE .156" TUBE WALL.
ADD "L" AFTER DASH NUMBER TO DENOTE .188" TUBE WALL.

MATERIAL:

SEE PROCUREMENT SPECIFICATION.
CORROSION RESISTANT STEEL (CLASS 316), CODE "K"
CORROSION RESISTANT STEEL (AL6XN), CODE "L" PER ASTM -B691

FINISH:

SURFACE SHALL BE 125 RMS MAXIMUM PER ANSI B46.1 UNLESS OTHERWISE SPECIFIED.

NOTES:

1. REMOVE BURRS AND SLIVERS. BREAK SHARP EDGES UNLESS OTHERWISE NOTED.
2. DIMENSIONS IN INCHES. UNLESS OTHERWISE SPECIFIED, TOLERANCE DECIMALS ±.016.
3. FOR DESIGN FEATURE PURPOSES, THIS DRAWING TAKES PRECEDENCE OVER PROCUREMENT DOCUMENTS REFERENCED HEREIN.
4. REFERENCED DOCUMENTS SHALL BE OF THE ISSUE IN EFFECT ON THE DATE OF INVITATION FOR BID.
5. MARKING OF FITTINGS SHALL BE CONSISTANT WITH PROCUREMENT SPECIFICATION USING APPLICABLE KC STANDARD AND PART NUMBER DESIGNATIONS AS SHOWN ON THIS DRAWING.
6. DIAMETER "P" APPLICABLE TO KC145K20B AND KC145K24B ONLY.
7. ALL DIAMETRAL DIMENSIONS SHALL BE CONCENTRIC WITH "C" BORE WITHIN .005 T.I.R.
8. FITTINGS PROVIDED HEREIN SHALL BE WELDED TO CORRESPONDING TUBE SIZES USING AUTOMATIC WELDING EQUIPMENT (ASTRO-ARC CO. OR EQUIVALENT).
9. AFTER MACHINING, THE CODE L FITTINGS SHALL BE PICKLED IN ACCORDANCE WITH ASTM A380 CODE B AND THEN PASSIVATED IN ACCORDANCE WITH SAE-AMS-2700 METHOD I TYPE 6, EXCEPT THAT 20% TO 25% NITRIC ACID SOLUTION SHALL BE USED. A TEST FOR SURFACE PASSIVITY SHALL BE DONE IN ACCORDANCE WITH SAE-AMS-2700 TEST METHOD 102 - COPPER SULFATE TEST.

EXAMPLE OF PART NOS.

KC145K4A = SPUD, BUTTWELD TUBE, FOR 1/4" X .035 WALL TUBING, TYPE 316 SS.
KC145L6C = SPUD, BUTTWELD TUBE, FOR 3/8" X .058 WALL TUBING, AL6XN.

REVISED: ADDED CODE "L" MATERIAL AND NOTE 9 5-1-07

APPROVED: 5-1-90

CUSTODIAN: JOHN F. KENNEDY SPACE CENTER

PROCUREMENT SPEC.
KSC-F-124

COORDINATION STATUS
KSC DE

SPUD, BUTTWELD TUBE

STANDARD PART
KC145

SHEET 1 OF 2

NOTICE: WHEN GOVERNMENT DRAWINGS, SPECIFICATIONS OR OTHER DATA ARE USED FOR ANY PURPOSE OTHER THAN IN CONNECTION WITH A DEFINITELY RELATED GOVERNMENT PROCUREMENT OPERATION, THE UNITED STATES GOVERNMENT THEREBY INCURS NO RESPONSIBILITY NOR ANY OBLIGATION WHATSOEVER AND THE FACT THAT THE GOVERNMENT MAY HAVE FORMULATED, FURNISHED, OR IN ANY WAY SUPPLIED THE SAID DRAWINGS, SPECIFICATIONS, OR OTHER DATA IS NOT REGARDED BY IMPLICATION OR OTHERWISE AS IN ANY MANNER LICENSING THE HOLDER OR ANY OTHER PERSON OR CORPORATION, OR CONVEYING ANY RIGHTS OR PERMISSION TO MANUFACTURE, USE, OR SELL ANY PATENTED INVENTION THAT MAY IN ANY WAY BE RELATED THERETO.

FED SUP CLASS
4730

DASH NO. 316 STEEL	DASH NO. ALOXN	TUBE SIZE REF	A ±.003	B +.005 -.000	C ±.003	D +.005 -.000	E ±.003	F ±.004	G ±.005	H +.000 -.003	J ±.005	K ±.005	L ±.005	M (REF)	N ±.005	P +.000 -.003
K4A	L4A	1/4"X.035	.285	.255	.172	.258	.297	.299	.315	.383	.385	.328	.165	.878	.350	-
K6A	L6A	3/8"X.035	.410	.380	.297	.383	.428	.434	.441	.502	.385	.395	.245	1.025	.350	-
K6C	L6C	3/8"X.058	.410	.380	.251	.383	.428	.434	.441	.502	.385	.395	.245	1.025	.350	-
K8B	L8B	1/2"X.049	.546	.506	.393	.509	.554	.564	.589	.682	.385	.405	.280	1.070	.350	-
K8E	L8E	1/2"X.072	.546	.506	.347	.509	.554	.564	.589	.682	.385	.405	.280	1.070	.350	-
K12D	L12D	3/4"X.065	.816	.756	.611	.759	.804	.828	.880	.972	.535	.405	.300	1.240	.500	-
K12G	L12G	3/4"X.109	.816	.756	.523	.759	.804	.828	.880	.972	.535	.405	.300	1.240	.500	-
K16F	L16F	1"X.095	1.066	1.006	.801	1.009	1.054	1.083	1.130	1.222	.535	.405	.400	1.340	.500	-
K16H	L16H	1"X.120	1.066	1.006	.751	1.009	1.054	1.083	1.130	1.222	.535	.405	.400	1.340	.500	-
K20G	L20G	1-1/4"X.049	1.330	1.256	1.143	1.259	1.304	1.341	1.412	1.536	.535	.475	.400	1.410	.500	1.134
K20J	L20J	1-1/4"X.134	1.330	1.256	.973	1.259	1.304	1.341	1.412	1.536	.535	.475	.400	1.410	.500	-
K24G	L24G	1-1/2"X.049	1.605	1.511	1.398	1.514	1.559	1.611	1.630	1.786	.535	.485	.475	1.495	.500	1.370
K24J	L24J	1-1/2"X.134	1.605	1.511	1.218	1.514	1.559	1.611	1.630	1.786	.535	.485	.475	1.495	.500	-
K24K	L24K	1-1/2"X.156	1.605	1.511	1.174	1.514	1.559	1.611	1.630	1.786	.535	.485	.475	1.495	.500	-
K24L	L24L	1-1/2"X.188	1.605	1.511	1.120	1.514	1.559	1.611	1.630	1.786	.535	.485	.475	1.495	.500	-
K32D	L32D	2"X.065	2.105	2.011	1.866	2.014	2.059	2.161	2.195	2.411	.535	.635	.540	1.710	.500	-
K32L	L32L	2"X.188	2.105	2.011	1.620	2.014	2.059	2.161	2.195	2.411	.535	.635	.540	1.710	.500	-

REVISED: ADDED CODE "L" MATERIAL DASH NO. 5-1-07

APPROVED: 5-1-90

CUSTODIAN: JOHN F. KENNEDY SPACE CENTER

PROCUREMENT SPEC. KSC-F-124

COORDINATION STATUS KSC DE

SPUD, BUTTWELD TUBE

STANDARD PART

KC145

SHEET 2 OF 2

NOTICE: OWER GOVERNMENT DRAWINGS, SPECIFICATIONS OR OTHER DATA ARE USED FOR ANY PURPOSE OTHER THAN IN CONNECTION WITH A DEFINITELY RELATED GOVERNMENT PROCUREMENT OPERATION, THE UNITED STATES GOVERNMENT THEREBY INCURS NO RESPONSIBILITY NOR ANY OBLIGATION WHATSOEVER AND THE FACT THAT THE GOVERNMENT MAY HAVE FORMULATED, FURNISHED, OR IN ANY WAY SUPPLIED THE SAID DRAWINGS, SPECIFICATIONS, OR OTHER DATA IS NOT REGARDED BY IMPLICATION OR OTHERWISE AS IN ANY MANNER LICENSING THE HOLDER OR ANY OTHER PERSON OR CORPORATION, OR CONVEYING ANY RIGHTS OR PERMISSION TO MANUFACTURE, USE, OR SELL ANY PATENTED INVENTION THAT MAY IN ANY WAY BE RELATED THERETO.

FED SUP CLASS
4730

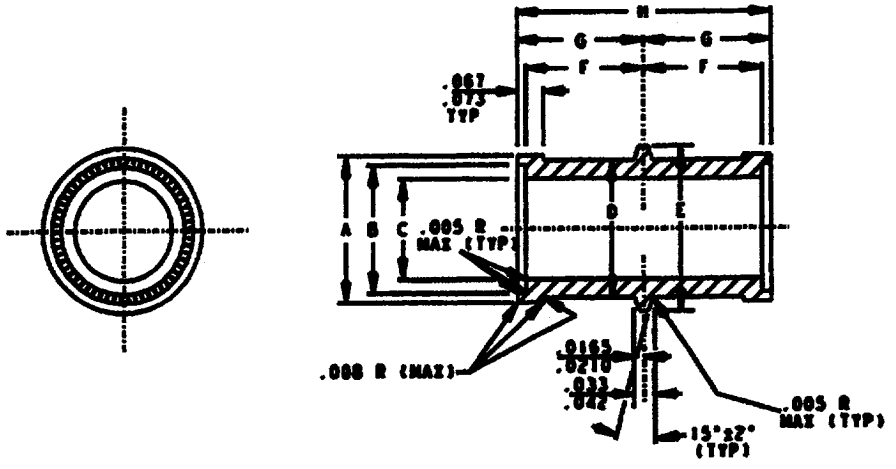

SCHEDULE:

ADD "A" AFTER DASH NUMBER TO DENOTE .035" TUBE WALL.
ADD "B" AFTER DASH NUMBER TO DENOTE .049" TUBE WALL.
ADD "C" AFTER DASH NUMBER TO DENOTE .058" TUBE WALL.
ADD "D" AFTER DASH NUMBER TO DENOTE .065" TUBE WALL.
ADD "E" AFTER DASH NUMBER TO DENOTE .072" TUBE WALL.
ADD "F" AFTER DASH NUMBER TO DENOTE .095" TUBE WALL.
ADD "G" AFTER DASH NUMBER TO DENOTE .109" TUBE WALL.
ADD "H" AFTER DASH NUMBER TO DENOTE .120" TUBE WALL
ADD "J" AFTER DASH NUMBER TO DENOTE .134" TUBE WALL.
ADD "K" AFTER DASH NUMBER TO DENOTE .156" TUBE WALL.
ADD "L" AFTER DASH NUMBER TO DENOTE .188" TUBE WALL.

MATERIAL:

SEE PROCUREMENT SPECIFICATION.
CORROSION RESISTANT STEEL (CLASS 316), CODE "K"
CORROSION RESISTANT STEEL (ALGXN), CODE "L" PER ASTM -B691

FINISH:

SURFACE SHALL BE 125 RMS MAXIMUM PER ANSI B46.1 UNLESS OTHERWISE SPECIFIED.

NOTES:

1. REMOVE BURRS AND SLIVERS. BREAK SHARP EDGES UNLESS OTHERWISE NOTED.
2. DIMENSIONS IN INCHES. UNLESS OTHERWISE SPECIFIED, TOLERANCE DECIMALS ±T.016.
3. FOR DESIGN FEATURE PURPOSES. THIS DRAWING TAKES PRECEDENCE OVER PROCUREMENT DOCUMENTS REFERENCED HEREIN.
4. REFERENCED DOCUMENTS SHALL BE OF THE ISSUE IN EFFECT ON THE DATE OF INVITATION FOR BID.
5. MARKING OF FITTINGS SHALL BE CONSISTANT WITH PROCUREMENT SPECIFICATION USING APPLICABLE KC STANDARD AND PART NUMBER DESIGNATIONS AS SHOWN ON THIS DRAWING.
6. ALL DIAMETRAL DIMENSIONS SHALL BE CONCENTRIC WITH "C" BORE WITHIN .005 T.I.R.
7. FITTINGS PROVIDED HEREIN SHALL BE WELDED TO CORRESPONDING TUBE SIZES USING AUTOMATIC WELDING EQUIPMENT (ASTRO-ARC CO. OR EQUIVALENT).
8. AFTER MACHINING, THE CODE L FITTINGS SHALL BE PICKLED IN ACCORDANCE WITH ASTM A380 CODE B AND THEN PASSIVATED IN ACCORDANCE WITH SAE-AMS-2700 METHOD 1 TYPE 6, EXCEPT THAT 20% TO 25% NITRIC ACID SOLUTION SHALL BE USED. A TEST FOR SURFACE PASSIVITY SHALL BE DONE IN ACCORDANCE WITH SAE-AMS-2700 TEST METHOD 102 - COPPER SULFATE TEST.

EXAMPLE OF PART NOS.

KC146K4A = UNION, BUTTWELD TUBE, FOR 1/4" X .035 WALL TYPE 316 SS TUBING.
KC146L12G = UNION, BUTTWELD TUBE, FOR 3/4" X .109 WALL ALGXN TUBING.

APPROVED: 5-1-90 REVISED: ADDED CODE "L" MATERIAL AND NOTE 8 5-1-07

CUSTODIAN: JOHN F. KENNEDY SPACE CENTER		
PROCUREMENT SPEC. KSC-F-124	UNION, BUTTWELD TUBE	STANDARD PART KC146
COORDINATION STATUS KSC DE		SHEET 1 OF 2

KSC FORM 32-85 (CG 4/92)

NOTICE: WHEN GOVERNMENT DRAWINGS, SPECIFICATIONS OR OTHER DATA ARE USED FOR ANY PURPOSE OTHER THAN IN CONNECTION WITH A DEFINITELY RELATED GOVERNMENT PROCUREMENT OPERATION, THE UNITED STATES GOVERNMENT THEREBY INCURS NO RESPONSIBILITY NOR ANY OBLIGATION WHATSOEVER AND THE FACT THAT THE GOVERNMENT MAY HAVE FORMULATED, FURNISHED, OR IN ANY WAY SUPPLIED THE SAID DRAWINGS, SPECIFICATIONS, OR OTHER DATA IS NOT REGARDED BY IMPLICATION OR OTHERWISE AS IN ANY MANNER LICENSING THE HOLDER OR ANY OTHER PERSON OR CORPORATION, OR CONVEYING ANY RIGHTS OR PERMISSION TO MANUFACTURE, USE, OR SELL ANY PATENTED INVENTION THAT MAY IN ANY WAY BE RELATED THERETO.

FED SUP CLASS
4730

DASH NO. 316 STEEL	DASH NO. ALGXH	TUBE SIZE REF	A ±.003	B +.005 -.000	C ±.003	D +.005 -.000	E ±.003	F ±.005	G ±.005	H (REF)
K4A	L4A	1/4"X.035	.285	.255	.172	.250	.297	.350	.385	.770
K6A	L6A	3/8"X.035	.410	.300	.297	.383	.420	.350	.385	.770
K6C	L6C	3/8"X.058	.410	.300	.251	.383	.420	.350	.385	.770
K8D	L8D	1/2"X.049	.546	.506	.393	.509	.554	.350	.385	.770
K8E	L8E	1/2"X.072	.546	.506	.347	.509	.554	.350	.385	.770
K12D	L12D	3/4"X.065	.816	.756	.611	.759	.804	.500	.535	1.070
K12G	L12G	3/4"X.109	.816	.756	.523	.759	.804	.500	.535	1.070
K16F	L16F	1"X.095	1.066	1.006	.801	1.009	1.054	.500	.535	1.070
K16H	L16H	1"X.120	1.066	1.006	.751	1.009	1.054	.500	.535	1.070
K20D	L20D	1-1/4"X.049	1.330	1.256	1.143	1.259	1.304	.500	.535	1.070
K20J	L20J	1-1/4"X.134	1.330	1.256	.973	1.259	1.304	.500	.535	1.070
K24D	L24D	1-1/2"X.049	1.605	1.511	1.390	1.514	1.559	.500	.535	1.070
K24J	L24J	1-1/2"X.134	1.605	1.511	1.218	1.514	1.559	.500	.535	1.070
K24K	L24K	1-1/2"X.156	1.605	1.511	1.174	1.514	1.559	.500	.535	1.070
K24L	L24L	1-1/2"X.188	1.605	1.511	1.120	1.514	1.559	.500	.535	1.070
K32D	L32D	2"X.065	2.105	2.011	1.866	2.014	2.059	.500	.535	1.070
K32L	L32L	2"X.188	2.105	2.011	1.620	2.014	2.059	.500	.535	1.070

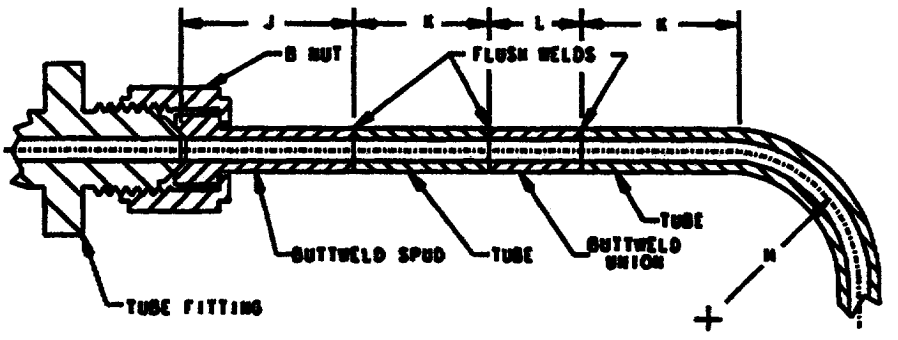

TUBE SIZE REF	J	K (MIN)	L	H (MIN)
1/4"	.71	1.44	.70	.56
3/8"	.78	1.44	.70	.94
1/2"	.88	1.44	.70	1.25
3/4"	1.12	1.44	1.00	1.75
1"	1.19	1.44	1.00	3.00
1-1/4"	1.22	1.63	1.00	3.75
1-1/2"	1.31	1.63	1.00	4.50
2"X.065	1.41	1.75	1.00	6.00
2"X.188	1.41	4.25	1.00	6.00

BUTTWELD UNION APPLICATION DATA

REVISED: ADDED CODE "L" MATERIAL DASH NO. 5-1-87

APPROVED: 5-1-90

CUSTODIAN: JOHN F. KENNEDY SPACE CENTER

PROCUREMENT SPEC. KSC-F-124

COORDINATION STATUS KSC DE

UNION, BUTTWELD TUBE

STANDARD PART

KC146

SHEET 2 OF 2

KSC FORM 32-85 (CG 4/92)

NOTICE: WHEN GOVERNMENT DRAWINGS, SPECIFICATIONS OR OTHER DATA ARE USED FOR ANY PURPOSE OTHER THAN IN CONNECTION WITH A DEFINITELY RELATED GOVERNMENT PROCUREMENT OPERATION, THE UNITED STATES GOVERNMENT THEREBY INCURS NO RESPONSIBILITY NOR ANY OBLIGATION WHATSOEVER AND THE FACT THAT THE GOVERNMENT MAY HAVE FORMULATED, FURNISHED, OR IN ANY WAY SUPPLIED THE SAID DRAWINGS, SPECIFICATIONS, OR OTHER DATA IS NOT REGARDED BY IMPLICATION OR OTHERWISE AS IN ANY MANNER LICENSING THE HOLDER OR ANY OTHER PERSON OR CORPORATION, OR CONVEYING ANY RIGHTS OR PERMISSION TO MANUFACTURE, USE, OR SELL ANY PATENTED INVENTION THAT MAY IN ANY WAY BE RELATED THERETO.

FED SUP CLASS
4730

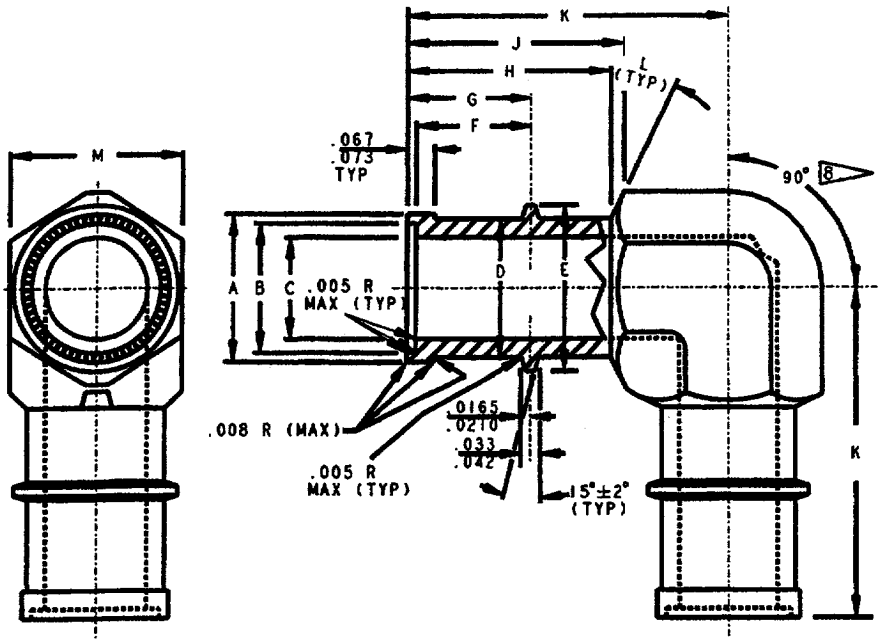

SCHEDULE:

ADD "A" AFTER DASH NUMBER TO DENOTE .035" TUBE WALL.
ADD "B" AFTER DASH NUMBER TO DENOTE .049" TUBE WALL.
ADD "C" AFTER DASH NUMBER TO DENOTE .058" TUBE WALL.
ADD "D" AFTER DASH NUMBER TO DENOTE .065" TUBE WALL.
ADD "E" AFTER DASH NUMBER TO DENOTE .072" TUBE WALL.
ADD "F" AFTER DASH NUMBER TO DENOTE .095" TUBE WALL.
ADD "G" AFTER DASH NUMBER TO DENOTE .109" TUBE WALL.
ADD "H" AFTER DASH NUMBER TO DENOTE .120" TUBE WALL
ADD "J" AFTER DASH NUMBER TO DENOTE .134" TUBE WALL.
ADD "K" AFTER DASH NUMBER TO DENOTE .156" TUBE WALL.
ADD "L" AFTER DASH NUMBER TO DENOTE .188" TUBE WALL.

MATERIAL:

SEE PROCUREMENT SPECIFICATION.
CORROSION RESISTANT STEEL (CLASS 316), CODE "K"
CORROSION RESISTANT STEEL (AL6XN), CODE "L" PER ASTM -B691

FINISH:

SURFACE SHALL BE 125 RMS MAXIMUM PER ANSI B46.1 UNLESS OTHERWISE SPECIFIED.

NOTES:

1. REMOVE BURRS AND SLIVERS. BREAK SHARP EDGES UNLESS OTHERWISE NOTED.
2. DIMENSIONS IN INCHES. UNLESS OTHERWISE SPECIFIED, TOLERANCE DECIMALS ±.016.
3. FOR DESIGN FEATURE PURPOSES, THIS DRAWING TAKES PRECEDENCE OVER PROCUREMENT DOCUMENTS REFERENCED HEREIN.
4. REFERENCED DOCUMENTS SHALL BE OF THE ISSUE IN EFFECT ON THE DATE OF INVITATION FOR BID.
5. MARKING OF FITTINGS SHALL BE CONSISTANT WITH PROCUREMENT SPECIFICATION USING APPLICABLE KC STANDARD AND PART NUMBER DESIGNATIONS AS SHOWN ON THIS DRAWING.
6. ALL DIAMETRAL DIMENSIONS SHALL BE CONCENTRIC WITH "C" BORE WITHIN .005 T.I.R.
7. FITTINGS PROVIDED HEREIN SHALL BE WELDED TO CORRESPONDING TUBE SIZES USING AUTOMATIC WELDING EQUIPMENT (ASTRO-ARC CO. OR EQUIVALENT).
8. FOR TUBE SIZES UP TO AND INCLUDING .375" OD, TOLERANCE IS ±2-1/2°. FOR ALL OTHERS, TOLERANCE IS ±1-1/2°.
9. AFTER MACHINING, THE CODE L FITTINGS SHALL BE PICKLED IN ACCORDANCE WITH ASTM A380 CODE B AND THEN PASSIVATED IN ACCORDANCE WITH SAE-AMS-2700 METHOD 1 TYPE 6, EXCEPT THAT 20% TO 25% NITRIC ACID SOLUTION SHALL BE USED. A TEST FOR SURFACE PASSIVITY SHALL BE DONE IN ACCORDANCE WITH SAE-AMS-2700 TEST METHOD 102 - COPPER SULFATE TEST.

EXAMPLE OF PART NOS.

KC147K4A = ELBOW, 90° BUTTWELD TUBE, FOR 1/4" X .035 WALL TUBING, TYPE 316 SS.
KC147L6C = ELBOW, 90° BUTTWELD TUBE, FOR 3/8" X .058 WALL TUBING, AL6XN.

REVISED: ADDED CODE "L" MATERIAL AND NOTE 9 5-1-07

APPROVED: 5-1-96

CUSTODIAN: JOHN F. KENNEDY SPACE CENTER

PROCUREMENT SPEC. KSC-F-124

COORDINATION STATUS KSC DE

ELBOW, 90° BUTTWELD TUBE

STANDARD PART

KC147

SHEET 1 OF 2

KSC FORM 32-85 (CG 4/92)

NOTICE: WHEN GOVERNMENT DRAWINGS, SPECIFICATIONS OR OTHER DATA ARE USED FOR ANY PURPOSE OTHER THAN IN CONNECTION WITH A DEFINITELY RELATED GOVERNMENT PROCUREMENT OPERATION, THE UNITED STATES GOVERNMENT THEREBY INCURS NO RESPONSIBILITY NOR ANY OBLIGATION WHATSOEVER AND THE FACT THAT THE GOVERNMENT MAY HAVE FORMULATED, FURNISHED, OR IN ANY WAY SUPPLIED THE SAID DRAWINGS, SPECIFICATIONS, OR OTHER DATA IS NOT REGARDED BY IMPLICATION OR OTHERWISE AS IN ANY MANNER LICENSING THE HOLDER OR ANY OTHER PERSON OR CORPORATION, OR CONVEYING ANY RIGHTS OR PERMISSION TO MANUFACTURE, USE, OR SELL ANY PATENTED INVENTION THAT MAY IN ANY WAY BE RELATED THERETO.

FED SUP CLASS 4730

DASH NO. 316 STEEL	DASH NO. AL6XN	TUBE SIZE REF	A ±.003	B +.005 -.000	C ±.003	D +.005 -.000	E ±.003	F ±.005	G ±.005	H +.015 -.005	J (REF)	K ±.016	L (REF)	M (REF)	R ±.005
K4A	L4A	1/4"X.035	.285	.255	.172	.258	.297	.350	.385	.656	.680	.920	15	.438	.030
K6A	L6A	3/8"X.035	.410	.380	.297	.383	.428	.350	.385	.718	.742	1.110	15	.563	.030
K6C	L6C	3/8"X.058	.410	.380	.251	.383	.428	.350	.385	.718	.742	1.110	15	.563	.030
K8B	L8B	1/2"X.049	.546	.506	.393	.509	.554	.350	.385	.780	.812	1.280	15	.750	.030
K8E	L8E	1/2"X.072	.546	.506	.347	.509	.554	.350	.385	.780	.812	1.280	15	.750	.030
K12D	L12D	3/4"X.065	.816	.756	.611	.759	.804	.500	.535	.868	.909	1.640	15	1.063	.030
K12G	L12G	3/4"X.109	.816	.756	.523	.759	.804	.500	.535	.868	.909	1.640	15	1.063	.030
K16F	L16F	1" X .095	1.066	1.006	.801	1.009	1.054	.500	.535	.868	.909	1.810	15	1.313	.030
K16H	L16H	1" X .120	1.066	1.006	.751	1.009	1.054	.500	.535	.868	.909	1.810	15	1.313	.030
K20B	L20B	1-1/4"X.049	1.330	1.256	1.143	1.259	1.304	.500	.535	.930	1.036	2.090	30	1.625	.060
K20J	L20J	1-1/4"X.134	1.330	1.256	.973	1.259	1.304	.500	.535	.930	1.036	2.090	30	1.625	.060
K24B	L24B	1-1/2"X.049	1.605	1.511	1.398	1.514	1.559	.500	.535	.930	1.034	2.280	30	1.875	.060
K24J	L24J	1-1/2"X.134	1.605	1.511	1.218	1.514	1.559	.500	.535	.930	1.034	2.280	30	1.875	.060
K24K	L24K	1-1/2"X.156	1.605	1.511	1.174	1.514	1.559	.500	.535	.930	1.034	2.280	30	1.875	.060
K24L	L24L	1-1/2"X.188	1.605	1.511	1.120	1.514	1.559	.500	.535	.930	1.034	2.280	30	1.875	.060
K32D	L32D	2" X .065	2.105	2.011	1.866	2.014	2.059	.500	.535	1.055	1.298	3.060	45	2.500	.375
K32L	L32L	2" X .188	2.105	2.011	1.620	2.014	2.059	.500	.535	1.055	1.298	3.060	45	2.500	.375

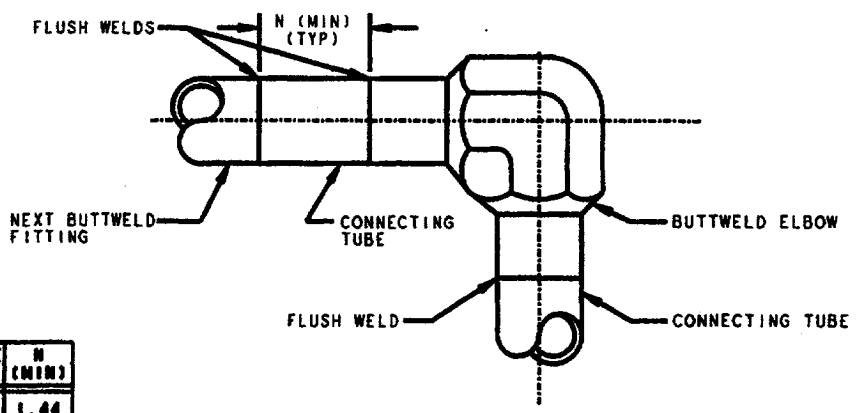

TUBE SIZE REF	N (MIN)
1/4"	1.44
3/8"	1.44
1/2"	1.44
3/4"	1.44
1"	1.44
1-1/4"	1.63
1-1/2"	1.63
2" X .065	1.75
2" X .188	4.25

BUTTWELD ELBOW
APPLICATION DATA

REVISED: ADDED CODE "L" MATERIAL DASH NO. 5-1-07

APPROVED: 5-1-98

CUSTODIAN: JOHN F. KENNEDY SPACE CENTER

PROCUREMENT SPEC. KSC-F-124

COORDINATION STATUS KSC DE

ELBOW, 90° BUTTWELD TUBE

STANDARD PART KC147

SHEET 2 OF 2

KSC FORM 32-85 (CG 4/92)

NOTICE: WHEN GOVERNMENT DRAWINGS, SPECIFICATIONS OR OTHER DATA ARE USED FOR ANY PURPOSE OTHER THAN IN CONNECTION WITH A DEFINITELY RELATED GOVERNMENT PROCUREMENT OPERATION, THE UNITED STATES GOVERNMENT THEREBY INCURS NO RESPONSIBILITY NOR ANY OBLIGATION WHATSOEVER AND THE FACT THAT THE GOVERNMENT MAY HAVE FORMULATED, FURNISHED, OR IN ANY WAY SUPPLIED THE SAID DRAWINGS, SPECIFICATIONS, OR OTHER DATA IS NOT REGARDED BY IMPLICATION OR OTHERWISE AS IN ANY MANNER LICENSING THE HOLDER OR ANY OTHER PERSON OR CORPORATION, OR CONVEYING ANY RIGHTS OR PERMISSION TO MANUFACTURE, USE, OR SELL ANY PATENTED INVENTION THAT MAY IN ANY WAY BE RELATED THERETO.

NOTICE: WHEN GOVERNMENT DRAWINGS, SPECIFICATIONS OR OTHER DATA ARE USED FOR ANY PURPOSE OTHER THAN IN CONNECTION WITH A DEFINITELY RELATED GOVERNMENT PROCUREMENT OPERATION, THE UNITED STATES GOVERNMENT THEREBY INCURS NO RESPONSIBILITY NOR ANY OBLIGATION WHATSOEVER AND THE FACT THAT THE GOVERNMENT MAY HAVE FORMULATED, FURNISHED, OR IN ANY WAY SUPPLIED THE SAID DRAWINGS, SPECIFICATIONS, OR OTHER DATA IS NOT REGARDED BY IMPLICATION OR OTHERWISE AS IN ANY MANNER LICENSING THE HOLDER OR ANY OTHER PERSON OR CORPORATION, OR CONVEYING ANY RIGHTS OR PERMISSION TO MANUFACTURE, USE, OR SELL ANY PATENTED INVENTION THAT MAY IN ANY WAY BE RELATED THERETO.

FED SUP CLASS
4730

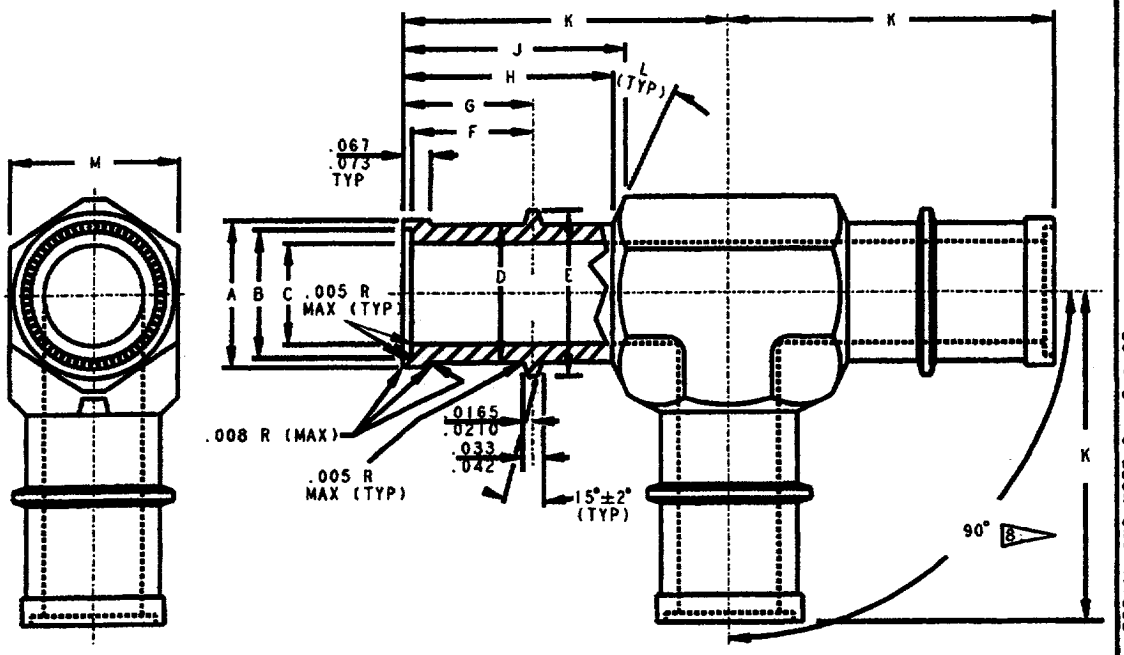

SCHEDULE:

ADD "A" AFTER DASH NUMBER TO DENOTE .035" TUBE WALL.
ADD "B" AFTER DASH NUMBER TO DENOTE .049" TUBE WALL.
ADD "C" AFTER DASH NUMBER TO DENOTE .058" TUBE WALL.
ADD "D" AFTER DASH NUMBER TO DENOTE .065" TUBE WALL.
ADD "E" AFTER DASH NUMBER TO DENOTE .072" TUBE WALL.
ADD "F" AFTER DASH NUMBER TO DENOTE .095" TUBE WALL.
ADD "G" AFTER DASH NUMBER TO DENOTE .109" TUBE WALL.
ADD "H" AFTER DASH NUMBER TO DENOTE .120" TUBE WALL.
ADD "J" AFTER DASH NUMBER TO DENOTE .134" TUBE WALL.
ADD "K" AFTER DASH NUMBER TO DENOTE .156" TUBE WALL.
ADD "L" AFTER DASH NUMBER TO DENOTE .188" TUBE WALL.

MATERIAL: SEE PROCUREMENT SPECIFICATION.
CORROSION RESISTANT STEEL (CLASS 316), CODE "K"
CORROSION RESISTIAN STEEL (AL6XN), CODE "L" PER ASTM -B691

FINISH: SURFACE SHALL BE 125 RMS MAXIMUM PER ANSI B46.1 UNLESS OTHERWISE SPECIFIED.

NOTES:

1. REMOVE BURRS AND SLIVERS. BREAK SHARP EDGES UNLESS OTHERWISE NOTED.
2. DIMENSIONS IN INCHES. UNLESS OTHERWISE SPECIFIED, TOLERANCE DECIMALS ±.016.
3. FOR DESIGN FEATURE PURPOSES, THIS DRAWING TAKES PRECEDENCE OVER PROCUREMENT DOCUMENTS REFERENCED HEREIN.
4. REFERENCED DOCUMENTS SHALL BE OF THE ISSUE IN EFFECT ON THE DATE OF INVITATION FOR BID.
5. MARKING OF FITTINGS SHALL BE CONSISTANT WITH PROCUREMENT SPECIFICATION USING APPLICABLE KC STANDARD AND PART NUMBER DESIGNATIONS AS SHOWN ON THIS DRAWING.
6. ALL DIAMETRAL DIMENSIONS SHALL BE CONCENTRIC WITH "C" BORE WITHIN .005 T.I.R.
7. FITTINGS PROVIDED HEREIN SHALL BE WELDED TO CORRESPONDING TUBE SIZES USING AUTOMATIC WELDING EQUIPMENT (ASTRO-ARC CO. OR EQUIVALENT).
8. FOR TUBE SIZES UP TO AND INCLUDING .375" OD, TOLERANCE IS ±2-1/2°. FOR ALL OTHERS, TOLERANCE IS ±1-1/2°.
9. AFTER MACHINING, THE CODE L FITTINGS SHALL BE PICKLED IN ACCORDANCE WITH ASTM A380 CODE B AND THEN PASSIVATED IN ACCORDANCE WITH SAE-AMS-2700 METHOD 1 TYPE 6, EXCEPT THAT 20% TO 25% NITRIC ACID SOLUTION SHALL BE USED. A TEST FOR SURFACE PASSIVITY SHALL BE DONE IN ACCORDANCE WITH SAE-AMS-2700 TEST METHOD 102 - COPPER SULFATE TEST.

EXAMPLE OF PART NOS.
KC148K4A = TEE, BUTTWELD TUBE, FOR 1/4" X .035 WALL TUBING, TYPE 316 SS.
KC148L6C = TEE, BUTTWELD TUBE, FOR 3/8" X .058 WALL TUBING, AL6XN.

REVISED: ADDED CODE "L" MATERIAL AND NOTE 9 5-1-07

APPROVED: 5-1-90

CUSTODIAN: JOHN F. KENNEDY SPACE CENTER		
PROCUREMENT SPEC. KSC-F-124	TEE, BUTTWELD TUBE	STANDARD PART KC148
COORDINATION STATUS KSC DE		SHEET 1 OF 2

KSC FORM 32-85 (CG 4/92)

FED SUP CLASS 4730

DASH NO. 316 STEEL	DASH NO. AL6XN	TUBE SIZE REF	A ±.003	B +.005 -.000	C ±.003	D +.005 -.000	E ±.003	F ±.005	G ±.005	H +.015 -.005	J (REF)	K ±.016	L (REF)	M (REF)	R ±.005
K4A	L4A	1/4"X.035	.285	.255	.172	.258	.297	.350	.385	.656	.680	.920	15	.438	.030
K6A	L6A	3/8"X.035	.410	.380	.297	.383	.428	.350	.385	.718	.742	1.110	15	.563	.030
K6C	L6C	3/8"X.058	.410	.380	.251	.383	.428	.350	.385	.718	.742	1.110	15	.563	.030
K8B	L8B	1/2"X.049	.546	.506	.393	.509	.554	.350	.385	.780	.812	1.280	15	.750	.030
K8E	L8E	1/2"X.072	.546	.506	.347	.509	.554	.350	.385	.780	.812	1.280	15	.750	.030
K12D	L12D	3/4"X.065	.816	.756	.611	.759	.804	.500	.535	.868	.909	1.640	15	1.063	.030
K12G	L12G	3/4"X.109	.816	.756	.523	.759	.804	.500	.535	.868	.909	1.640	15	1.063	.030
K16F	L16F	1"X.095	1.066	1.006	.801	1.009	1.054	.500	.535	.868	.909	1.810	15	1.313	.030
K16H	L16H	1"X.120	1.066	1.006	.751	1.009	1.054	.500	.535	.868	.909	1.810	15	1.313	.030
K20B	L20B	1-1/4"X.049	1.330	1.256	1.143	1.259	1.304	.500	.535	.930	1.036	2.090	30	1.625	.060
K20J	L20J	1-1/4"X.134	1.330	1.256	.973	1.259	1.304	.500	.535	.930	1.036	2.090	30	1.625	.060
K24B	L24B	1-1/2"X.049	1.605	1.511	1.398	1.514	1.559	.500	.535	.930	1.034	2.280	30	1.875	.060
K24J	L24J	1-1/2"X.134	1.605	1.511	1.218	1.514	1.559	.500	.535	.930	1.034	2.280	30	1.875	.060
K24K	L24K	1-1/2"X.156	1.605	1.511	1.174	1.514	1.559	.500	.535	.930	1.034	2.280	30	1.875	.060
K24L	L24L	1-1/2"X.188	1.605	1.511	1.120	1.514	1.559	.500	.535	.930	1.034	2.280	30	1.875	.060
K32D	L32D	2" X .065	2.105	2.011	1.866	2.014	2.059	.500	.535	1.055	1.298	3.060	45	2.500	.375
K32L	L32L	2" X .188	2.105	2.011	1.620	2.014	2.059	.500	.535	1.055	1.298	3.060	45	2.500	.375

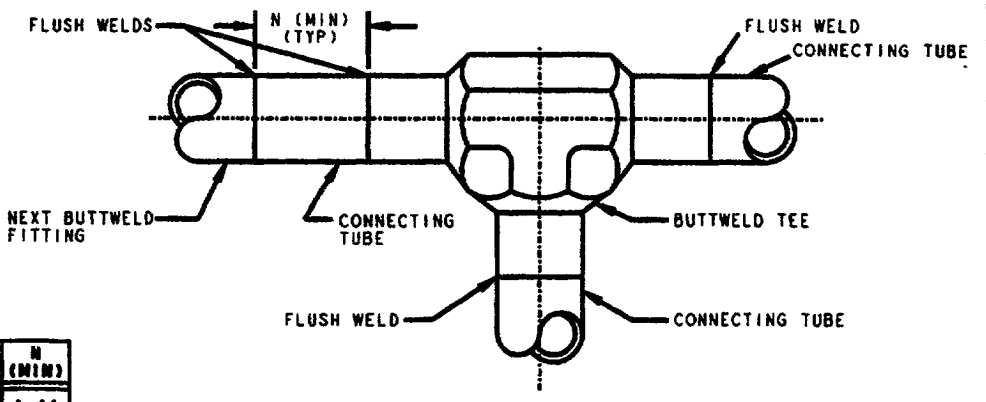

TUBE SIZE REF	N (MIN)
1/4"	1.44
3/8"	1.44
1/2"	1.44
3/4"	1.44
1"	1.44
1-1/4"	1.63
1-1/2"	1.63
2" X .065	1.75
2" X .188	4.25

BUTTWELD TEE
APPLICATION DATA

REVISED: ADDED CODE "L" MATERIAL DASH NO. 5-1-87

APPROVED: 5-1-80

CUSTODIAN: JOHN F. KENNEDY SPACE CENTER

PROCUREMENT SPEC. KSC-F-124

COORDINATION STATUS KSC DE

TEE, BUTTWELD TUBE

STANDARD PART KC148

SHEET 2 OF 2

KSC FORM 32-85 (CG 4/92)

NOTICE: WHEN GOVERNMENT DRAWINGS, SPECIFICATIONS OR OTHER DATA ARE USED FOR ANY PURPOSE OTHER THAN IN CONNECTION WITH A DEFINITELY RELATED GOVERNMENT PROCUREMENT OPERATION, THE UNITED STATES GOVERNMENT THEREBY INCURS NO RESPONSIBILITY NOR ANY OBLIGATION WHATSOEVER AND THE FACT THAT THE GOVERNMENT MAY HAVE FORMULATED, FURNISHED, OR IN ANY WAY SUPPLIED THE SAID DRAWINGS, SPECIFICATIONS, OR OTHER DATA IS NOT REGARDED BY IMPLICATION OR OTHERWISE AS IN ANY MANNER LICENSING THE HOLDER OR ANY OTHER PERSON OR CORPORATION, OR CONVEYING ANY RIGHTS OR PERMISSION TO MANUFACTURE, USE, OR SELL ANY PATENTED INVENTION THAT MAY IN ANY WAY BE RELATED THERETO.

FED SUP CLASS
4730

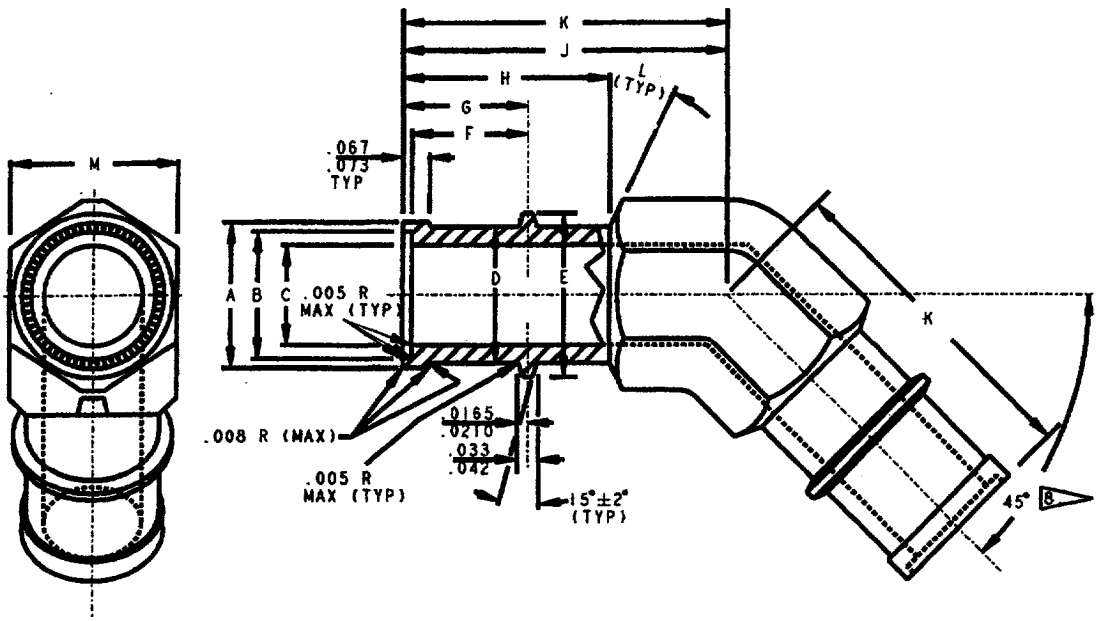

SCHEDULE:

ADD "A" AFTER DASH NUMBER TO DENOTE .035" TUBE WALL.
ADD "B" AFTER DASH NUMBER TO DENOTE .049" TUBE WALL.
ADD "C" AFTER DASH NUMBER TO DENOTE .058" TUBE WALL.
ADD "D" AFTER DASH NUMBER TO DENOTE .065" TUBE WALL.
ADD "E" AFTER DASH NUMBER TO DENOTE .072" TUBE WALL.
ADD "F" AFTER DASH NUMBER TO DENOTE .095" TUBE WALL.
ADD "G" AFTER DASH NUMBER TO DENOTE .109" TUBE WALL.
ADD "H" AFTER DASH NUMBER TO DENOTE .120" TUBE WALL
ADD "J" AFTER DASH NUMBER TO DENOTE .134" TUBE WALL.
ADD "K" AFTER DASH NUMBER TO DENOTE .156" TUBE WALL.
ADD "L" AFTER DASH NUMBER TO DENOTE .188" TUBE WALL.

MATERIAL: SEE PROCUREMENT SPECIFICATION.
CORROSION RESISTANT STEEL (CLASS 316), CODE "K"
CORROSION RESISTANT STEEL (AL6XN), CODE "L" PER ASTM -B691

FINISH: SURFACE SHALL BE 125 RMS MAXIMUM PER ANSI B46.1 UNLESS OTHERWISE SPECIFIED.

NOTES:

1. REMOVE BURRS AND SLIVERS. BREAK SHARP EDGES UNLESS OTHERWISE NOTED.
2. DIMENSIONS IN INCHES. UNLESS OTHERWISE SPECIFIED, TOLERANCE DECIMALS ±.016.
3. FOR DESIGN FEATURE PURPOSES. THIS DRAWING TAKES PRECEDENCE OVER PROCUREMENT DOCUMENTS REFERENCED HEREIN.
4. REFERENCED DOCUMENTS SHALL BE OF THE ISSUE IN EFFECT ON THE DATE OF INVITATION FOR BID.
5. MARKING OF FITTINGS SHALL BE CONSISTANT WITH PROCUREMENT SPECIFICATION USING APPLICABLE KC STANDARD AND PART NUMBER DESIGNATIONS AS SHOWN ON THIS DRAWING.
6. ALL DIAMETRAL DIMENSIONS SHALL BE CONCENTRIC WITH "C" BORE WITHIN .005 T.I.R.
7. FITTINGS PROVIDED HEREIN SHALL BE WELDED TO CORRESPONDING TUBE SIZES USING AUTOMATIC WELDING EQUIPMENT (ASTRO-ARC CO. OR EQUIVALENT).
8. FOR TUBE SIZES UP TO AND INCLUDING .375" OD, TOLERANCE IS ±2-1/2°. FOR ALL OTHERS, TOLERANCE IS ±1-1/2°.
9. AFTER MACHINING, THE CODE L FITTINGS SHALL BE PICKLED IN ACCORDANCE WITH ASTM A380 CODE B AND THEN PASSIVATED IN ACCORDANCE WITH SAE-AMS-2700 METHOD I TYPE 6, EXCEPT THAT 20% TO 25% NITRIC ACID SOLUTION SHALL BE USED. A TEST FOR SURFACE PASSIVITY SHALL BE DONE IN ACCORDANCE WITH SAE-AMS-2700 TEST METHOD 102 - COPPER SULFATE TEST.

EXAMPLE OF PART NOS.
KC149K4A = ELBOW, 45° BUTTWELD TUBE, FOR 1/2" X .035 WALL TUBING, TYPE 316 SS.
KC149L6C = ELBOW, 45° BUTTWELD TUBE, FOR 3/8" X .058 WALL TUBING, AL6XN.

REVISED: ADDED CODE "L" MATERIAL AND NOTE 9 5-1-97

APPROVED: 9-1-90

CUSTODIAN: JOHN F. KENNEDY SPACE CENTER		
PROCUREMENT SPEC. KSC-F-124	ELBOW, 45° BUTTWELD TUBE	STANDARD PART
COORDINATION STATUS		KC149
KSC DE		SHEET 1 OF 2

KSC FORM 32-05 (CG 4/92)

NOTICE: WHEN GOVERNMENT DRAWINGS, SPECIFICATIONS OR OTHER DATA ARE USED FOR ANY PURPOSE OTHER THAN IN CONNECTION WITH A DEFINITELY RELATED GOVERNMENT PROCUREMENT OPERATION, THE UNITED STATES GOVERNMENT THEREBY INCURS NO RESPONSIBILITY NOR ANY OBLIGATION WHATSOEVER AND THE FACT THAT THE GOVERNMENT MAY HAVE FORMULATED, FURNISHED, OR IN ANY WAY SUPPLIED THE SAID DRAWINGS, SPECIFICATIONS, OR OTHER DATA IS NOT REGARDED BY IMPLICATION OR OTHERWISE AS IN ANY MANNER LICENSING THE HOLDER OR ANY OTHER PERSON OR CORPORATION, OR CONVEYING ANY RIGHTS OR PERMISSION TO MANUFACTURE, USE, OR SELL ANY PATENTED INVENTION THAT MAY IN ANY WAY BE RELATED THERETO.

FED SUP CLASS
4730

DASH NO. CRE STEEL	DASH NO. AL6XN	TUBE SIZE REF	A ±.003	B +.005 -.000	C ±.003	D +.005 -.000	E ±.003	F ±.005	G ±.005	H +.015 -.005	J (REF)	K ±.016	L (REF)	M (REF)	R ±.005
K4A	L4A	1/4"X.035	.285	.255	.172	.258	.297	.350	.385	.656	.680	.920	15	.438	.030
K6A	L6A	3/8"X.035	.410	.380	.297	.383	.428	.350	.385	.718	.742	1.110	15	.563	.030
K6C	L6C	3/8"X.058	.410	.380	.251	.383	.428	.350	.385	.718	.742	1.110	15	.563	.030
K8B	L8B	1/2"X.049	.546	.506	.393	.509	.554	.350	.385	.780	.812	1.280	15	.750	.030
K8E	L8E	1/2"X.072	.546	.506	.347	.509	.554	.350	.385	.780	.812	1.280	15	.750	.030
K12D	L12D	3/4"X.065	.816	.756	.611	.759	.804	.500	.535	.868	.909	1.640	15	1.063	.030
K12G	L12G	3/4"X.109	.816	.756	.523	.759	.804	.500	.535	.868	.909	1.640	15	1.063	.030
K16F	L16F	1"X.095	1.066	1.006	.801	1.009	1.054	.500	.535	.868	.909	1.810	15	1.313	.030
K16H	L16H	1"X.120	1.066	1.006	.751	1.009	1.054	.500	.535	.868	.909	1.810	15	1.313	.030
K20B	L20B	1-1/4"X.049	1.330	1.256	1.143	1.259	1.304	.500	.535	.930	1.036	2.090	30	1.625	.060
K20J	L20J	1-1/4"X.134	1.330	1.256	.973	1.259	1.304	.500	.535	.930	1.036	2.090	30	1.625	.060
K24B	L24B	1-1/2"X.049	1.605	1.511	1.398	1.514	1.559	.500	.535	.930	1.034	2.280	30	1.875	.060
K24J	L24J	1-1/2"X.134	1.605	1.511	1.218	1.514	1.559	.500	.535	.930	1.034	2.280	30	1.875	.060
K24K	L24K	1-1/2"X.156	1.605	1.511	1.174	1.514	1.559	.500	.535	.930	1.034	2.280	30	1.875	.060
K24L	L24L	1-1/2"X.188	1.605	1.511	1.120	1.514	1.559	.500	.535	.930	1.034	2.280	30	1.875	.060
K32D	L32D	2"X.065	2.105	2.011	1.866	2.014	2.059	.500	.535	1.055	1.298	3.060	30	2.500	.375
K32L	L32L	2"X.188	2.105	2.011	1.620	2.014	2.059	.500	.535	1.055	1.298	3.060	30	2.500	.375

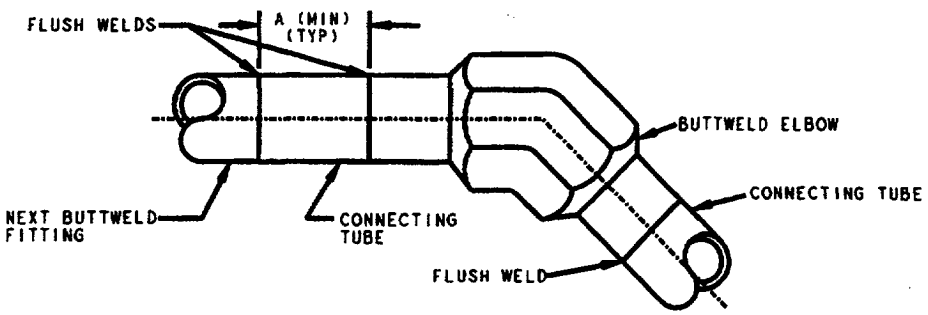

TUBE SIZE REF	A (MIN)
1/4"	1.44
3/8"	1.44
1/2"	1.44
3/4"	1.44
1"	1.44
1-1/4"	1.63
1-1/2"	1.63
2" X .065	1.75
2" X .188	4.25

BUTTWELD ELBOW
APPLICATION DATA

REVISED: ADDED CODE "L" MATERIAL DASH NO. 5-1-07

APPROVED: 8-1-90

CUSTODIAN: JOHN F. KENNEDY SPACE CENTER

PROCUREMENT SPEC. KSC-F-124

COORDINATION STATUS KSC DE

ELBOW, 45° BUTTWELD TUBE

STANDARD PART

KC149

SHEET 2 OF 2

KSC FORM 32-85 (CG 4/92)

NOTICE: WHEN GOVERNMENT DRAWINGS, SPECIFICATIONS OR OTHER DATA ARE USED FOR ANY PURPOSE OTHER THAN IN CONNECTION WITH A DEFINITELY RELATED GOVERNMENT PROCUREMENT OPERATION, THE UNITED STATES GOVERNMENT THEREBY INCURS NO RESPONSIBILITY NOR ANY OBLIGATION WHATSOEVER AND THE FACT THAT THE GOVERNMENT MAY HAVE FORMULATED, FURNISHED, OR IN ANY WAY SUPPLIED THE SAID DRAWINGS, SPECIFICATIONS, OR OTHER DATA IS NOT REGARDED BY IMPLICATION OR OTHERWISE AS IN ANY MANNER LICENSING THE HOLDER OR ANY OTHER PERSON OR CORPORATION, OR CONVEYING ANY RIGHTS OR PERMISSION TO MANUFACTURE, USE, OR SELL ANY PATENTED INVENTION THAT MAY IN ANY WAY BE RELATED THERETO.

NOTICE: WHEN GOVERNMENT DRAWINGS, SPECIFICATIONS OR OTHER DATA ARE USED FOR ANY PURPOSE OTHER THAN IN CONNECTION WITH A DEFINITELY RELATED GOVERNMENT PROCUREMENT OPERATION, THE UNITED STATES GOVERNMENT THEREBY INCURS NO RESPONSIBILITY NOR ANY OBLIGATION WHATSOEVER AND THE FACT THAT THE GOVERNMENT MAY HAVE FORMULATED, FURNISHED, OR IN ANY WAY SUPPLIED THE SAID DRAWINGS, SPECIFICATIONS, OR OTHER DATA IS NOT REGARDED BY IMPLICATION OR OTHERWISE AS IN ANY MANNER LICENSING THE HOLDER OR ANY OTHER PERSON OR CORPORATION, OR CONVEYING ANY RIGHTS OR PERMISSION TO MANUFACTURE, USE, OR SELL ANY PATENTED INVENTION THAT MAY IN ANY WAY BE RELATED THERETO.

FED SUP CLASS
4730

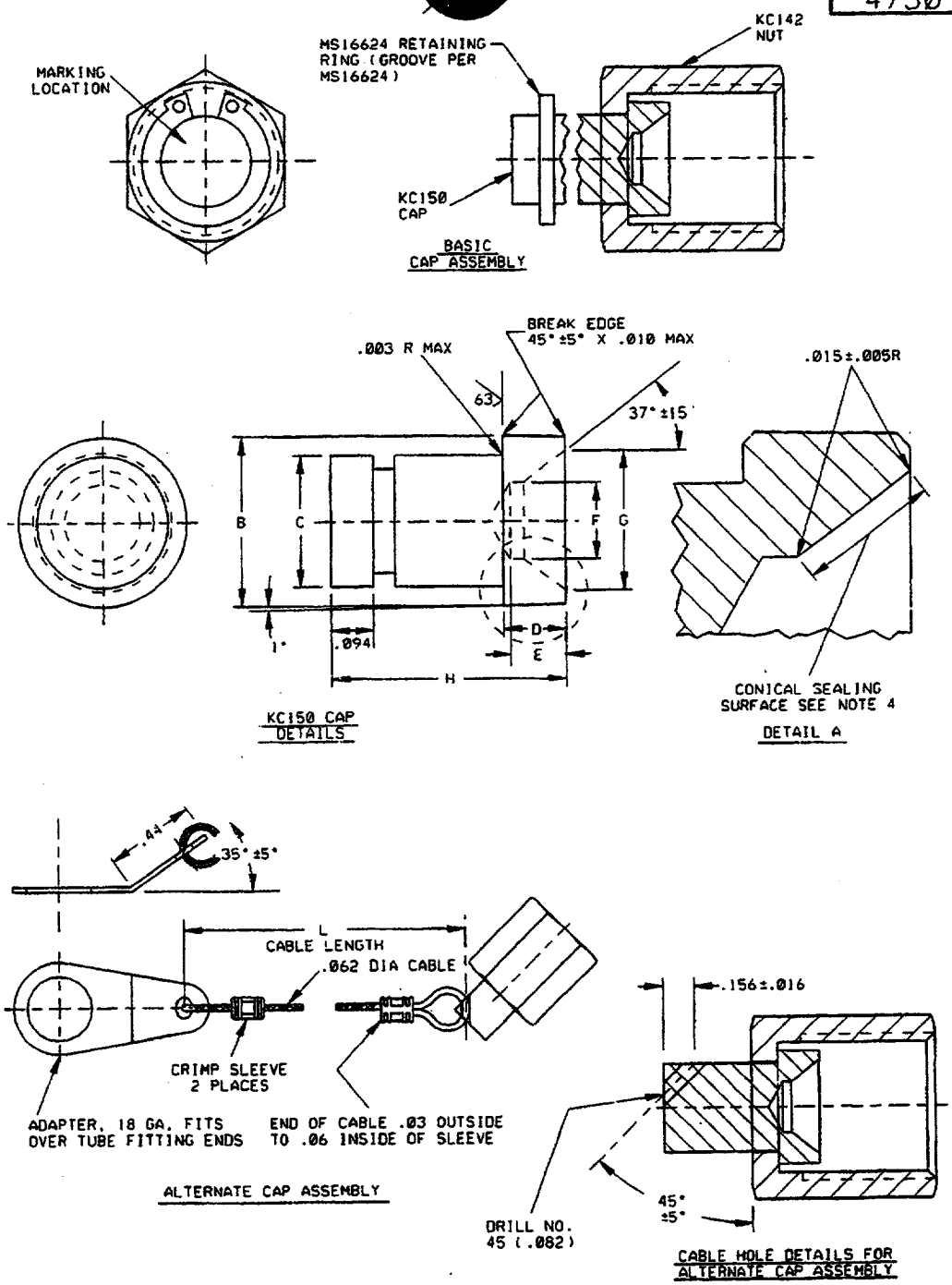

REVISED: (F) 8-1-90 (G) DASH NUMBER CHANGE 1-2-91 (H) DIM D & E 7-24-97

APPROVED: 3-23-66

CUSTODIAN: JOHN F. KENNEDY SPACE CENTER		
PROCUREMENT SPEC. NONE	CAP, CAP ASSEMBLY PRESSURE SEAL FLARED TUBE FITTING	STANDARD PART
COORDINATION STATUS KSC DE		KC150
		SHEET 1 OF 2

KSC FORM 32-85 (CG 4/92)

FED SUP CLASS
4730

DASH NO. CRE STEEL	DASH NO. AL ALLOY	TUBE OD REF	B DIA +.000 -.003	C DIA +.000 -.003	D DIM	E DIM	F DIA	G DIA	H DIM	L CABLE LENGTH ±.25	KC142 NUT CRE STEEL	KC142 NUT AL ALLOY	MS16624 RETAINING RING DASH NO.
K4	D4	¼	.383	.297	.203	.125	.172	.315	.531	7	K4	D4	-4028
K6	D6	⅜	.502	.432	.266	.156	.297	.441	.625		K6	D6	-4043
K8	D8	½	.682	.562	.313	.172	.391	.589	.750		K8	D8	-4056
K10	D10	⅝	.797	.690	.281	.250	.438	.705			K10	D10	-4068
K12	D12	¾	.972	.826		.313	.563	.880	.875		K12	D12	-4081
K16	D16	1	1.222	1.081	.297		.813	1.130			K16	D16	-4106
K20	D20	1-1/4	1.534	1.339	.375		1.078	1.412	1.000	9	K20	D20	-4131
K24	D24	1-1/2	1.784	1.609	.406	.375	1.313	1.630	1.125		K24	D24	-4162
K28	D28	1-3/4	2.159	1.882	.500	.375	1.547	1.945	1.375	11	K28	D28	-4187
K32	D32	2	2.409	2.159	.578	.500	1.781	2.195	1.438		K32	D32	-4215

CAP ASSY : SEE PROCUREMENT SPECIFCATION.
MATERIAL ALUMINUM ALLOY, 2024-T6, CODE "D". CABLE SHALL BE 300 SERIES SST.
CORROSION RESISTANT STEEL (CLASS 316), CODE "K" (WAS CODE "C").
CABLE SHALL BE 300 SERIES SST.

FINISH: SEE PROCUREMENT SPECIFICATION.

NOTES:

1. REMOVE BURRS AND SLIVERS. BREAK SHARP EDGES UNLESS OTHERWISE NOTED.
2. DIMENSIONS IN INCHES UNLESS OTHERWISE SPECIFIED. TOLERANCE DECIMALS ±.016, ANGLES ±1/2°.
3. MACHINED SURFACE ROUGHNESS, UNLESS OTHERWISE SPECIFIED, SHALL NOT EXCEED 125√ OR 125 RMS PER ANSI B46.1.
4. THE CONICAL SEALING SURFACE SHALL BE CONCENTRIC WITH G DIA WITHIN .005 FULL INDICATOR READING.
5. DIAMETERS B, C, AND G TO BE CONCENTRIC WITHIN .005 FULL INDICATOR READING FOR TUBE SIZE UP TO AND INCLUDING ¾" OD AND .010 FULL INDICATOR READING FOR 1" OD AND ABOVE.
6. CAP ASSEMBLY SHALL CONSIST OF A KC142 NUT, A RETAINING DEVICE FOR THE BASIC CAP ASSEMBLY ONLY, AND A CAP.
7. FOR DESIGN FEATURE PURPOSES, THIS DRAWING TAKES PRECEDENCE OVER PROCUREMENT DOCUMENTS REFERENCED HEREIN.
8. REFERENCED DOCUMENTS SHALL BE OF THE ISSUE IN EFFECT ON THE DATE OF INVITATION FOR BID.
9. MARKING OF FITTINGS SHALL BE CONSISTENT WITH PROCUREMENT SPECIFICATION USING APPLICABLE KC STANDARD AND PART NUMBER DESIGNATIONS AS SHOWN ON THIS DRAWING.

CODE: "A" AFTER DASH NUMBER INDICATES ALTERNATE CAP ASSEMBLY WITH DRILLED CAP AND RETAINING CABLE.

EXAMPLE OF PART NOS.
KC150K8 = CAP ASSEMBLY, ½" OD TUBE, CORROSION RESISTANT STEEL
KC150D12A = ALTERNATE CAP ASSEMBLY, ¾" OD TUBE, ALUMINUM ALLOY

REVISED: (F) 8-1-90 (G) DASH NUMBER CHANGE 1-2-91 (H) DIM D & E SHEET 1 7-24-97

APPROVED:

CUSTODIAN: JOHN F. KENNEDY SPACE CENTER

PROCUREMENT SPEC. NONE

COORDINATION STATUS KSC DE

CAP, CAP ASSEMBLY
PRESSURE SEAL
FLARED TUBE FITTING

STANDARD PART
KC150

SHEET 2 OF 2

KSC FORM 32-85 (CG 4/92)

NOTICE: WHEN GOVERNMENT DRAWINGS, SPECIFICATIONS OR OTHER DATA ARE USED FOR ANY PURPOSE OTHER THAN IN CONNECTION WITH A DEFINITELY RELATED GOVERNMENT PROCUREMENT OPERATION, THE UNITED STATES GOVERNMENT THEREBY INCURS NO RESPONSIBILITY NOR ANY OBLIGATION WHATSOEVER AND THE FACT THAT THE GOVERNMENT MAY HAVE FORMULATED, FURNISHED, OR IN ANY WAY SUPPLIED THE SAID DRAWINGS, SPECIFICATIONS, OR OTHER DATA IS NOT REGARDED BY IMPLICATION OR OTHERWISE AS IN ANY MANNER LICENSING THE HOLDER OR ANY OTHER PERSON OR CORPORATION, OR CONVEYING ANY RIGHTS OR PERMISSION TO MANUFACTURE, USE, OR SELL ANY PATENTED INVENTION THAT MAY IN ANY WAY BE RELATED THERETO.

FED SUP CLASS
4730

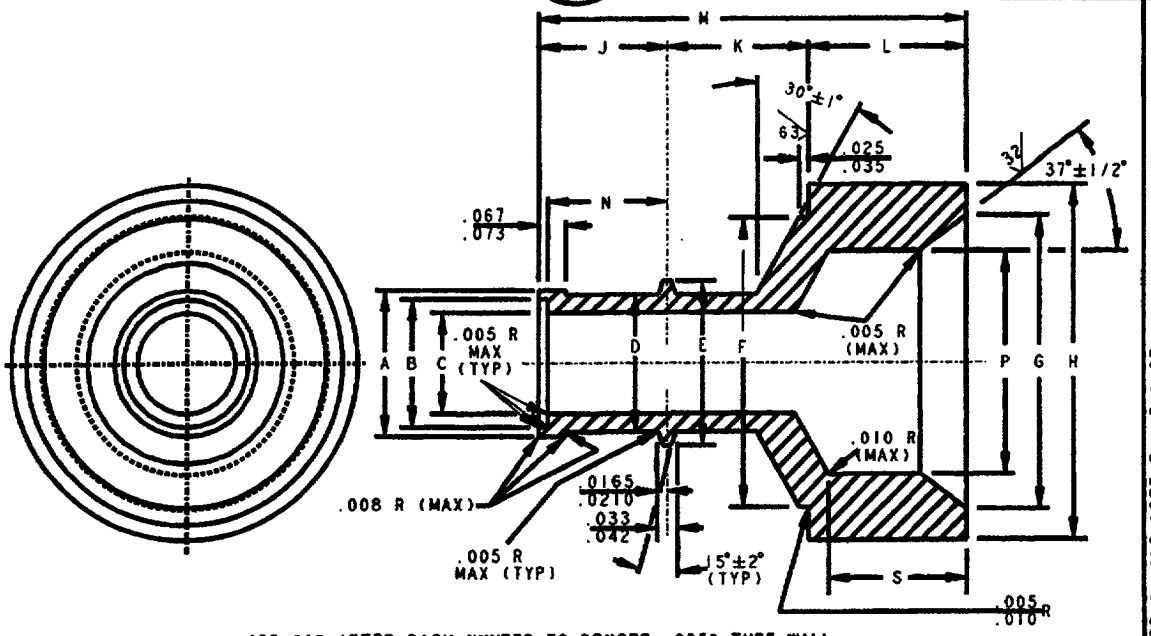

SCHEDULE:
ADD "A" AFTER DASH NUMBER TO DENOTE .035" TUBE WALL.
ADD "B" AFTER DASH NUMBER TO DENOTE .049" TUBE WALL.
ADD "C" AFTER DASH NUMBER TO DENOTE .058" TUBE WALL.
ADD "D" AFTER DASH NUMBER TO DENOTE .065" TUBE WALL.
ADD "E" AFTER DASH NUMBER TO DENOTE .072" TUBE WALL.
ADD "F" AFTER DASH NUMBER TO DENOTE .095" TUBE WALL.
ADD "G" AFTER DASH NUMBER TO DENOTE .109" TUBE WALL.
ADD "H" AFTER DASH NUMBER TO DENOTE .120" TUBE WALL.
ADD "J" AFTER DASH NUMBER TO DENOTE .134" TUBE WALL.
ADD "K" AFTER DASH NUMBER TO DENOTE .156" TUBE WALL.
ADD "L" AFTER DASH NUMBER TO DENOTE .188" TUBE WALL.

MATERIAL:
SEE PROCUREMENT SPECIFICATION.
CORROSION RESISTANT STEEL (CLASS 316), CODE "K"
CORROSION RESISTANT STEEL (AL6XN), CODE "L" PER ASTM -B691

FINISH:
SURFACE SHALL BE 125 RMS MAXIMUM PER ANSI B46.1 UNLESS OTHERWISE SPECIFIED.

NOTES:
1. REMOVE BURRS AND SLIVERS. BREAK SHARP EDGES UNLESS OTHERWISE NOTED.
2. DIMENSIONS IN INCHES. UNLESS OTHERWISE SPECIFIED, TOLERANCE DECIMALS ±.016.
3. FOR DESIGN FEATURE PURPOSES, THIS DRAWING TAKES PRECEDENCE OVER PROCUREMENT DOCUMENTS REFERENCED HEREIN.
4. REFERENCED DOCUMENTS SHALL BE OF THE ISSUE IN EFFECT ON THE DATE OF INVITATION FOR BID.
5. MARKING OF FITTINGS SHALL BE CONSISTANT WITH PROCUREMENT SPECIFICATION USING APPLICABLE KC STANDARD AND PART NUMBER DESIGNATIONS AS SHOWN ON THIS DRAWING.
6. ALL DIAMETRAL DIMENSIONS SHALL BE CONCENTRIC WITH "C" BORE WITHIN .005 T.I.R.
7. FITTINGS PROVIDED HEREIN SHALL BE WELDED TO CORRESPONDING TUBE SIZES USING AUTOMATIC WELDING EQUIPMENT (ASTRO-ARC CO. OR EQUIVALENT).
8. AFTER MACHINING, THE CODE L FITTINGS SHALL BE PICKLED IN ACCORDANCE WITH ASTM A380 CODE B AND THEN PASSIVATED IN ACCORDANCE WITH SAE-AMS-2700 METHOD I TYPE 6, EXCEPT THAT 20% TO 25% NITRIC ACID SOLUTION SHALL BE USED. A TEST FOR SURFACE PASSIVITY SHALL BE DONE IN ACCORDANCE WITH SAE-AMS-2700 TEST METHOD 102 - COPPER SULFATE TEST.

EXAMPLE OF PART NOS.
KC151K4A-8 = SPUD, BUTTWELD TUBE, REDUCER-ADAPTER, FOR 1/4" X .035 WALL TUBING TO 1/2" TUBE SIZE, TYPE 316 SS.
KC151L6C-8 = SPUD, BUTTWELD TUBE, REDUCER-ADAPTER, FOR 3/8" X .058 WALL TUBING TO 1/2" TUBE SIZE, AL6XN.

REVISED: ADDED CODE "L" MATERIAL AND NOTE 8 5-1-07

APPROVED: 5-1-90

CUSTODIAN: JOHN F. KENNEDY SPACE CENTER

PROCUREMENT SPEC.
KSC-F-124

COORDINATION STATUS
KSC DE

SPUD, BUTTWELD TUBE
REDUCER - ADAPTER

STANDARD PART
KC151

SHEET 1 OF 2

KSC FORM 32-85 (CG 4/92)

NOTICE: WHEN GOVERNMENT DRAWINGS, SPECIFICATIONS OR OTHER DATA ARE USED FOR ANY PURPOSE OTHER THAN IN CONNECTION WITH A DEFINITELY RELATED GOVERNMENT PROCUREMENT OPERATION, THE UNITED STATES GOVERNMENT THEREBY INCURS NO RESPONSIBILITY NOR ANY OBLIGATION WHATSOEVER AND THE FACT THAT THE GOVERNMENT MAY HAVE FORMULATED, FURNISHED, OR IN ANY WAY SUPPLIED THE SAID DRAWINGS, SPECIFICATIONS, OR OTHER DATA IS NOT REGARDED BY IMPLICATION OR OTHERWISE AS IN ANY MANNER LICENSING THE HOLDER OR ANY OTHER PERSON OR CORPORATION, OR CONVEYING ANY RIGHTS OR PERMISSION TO MANUFACTURE, USE, OR SELL ANY PATENTED INVENTION THAT MAY IN ANY WAY BE RELATED THERETO.

NOTICE: WHEN GOVERNMENT DRAWINGS, SPECIFICATIONS OR OTHER DATA ARE USED FOR ANY PURPOSE OTHER THAN IN CONNECTION WITH A DEFINITELY RELATED GOVERNMENT PROCUREMENT OPERATION, THE UNITED STATES GOVERNMENT THEREBY INCURS NO RESPONSIBILITY NOR ANY OBLIGATION WHATSOEVER AND THE FACT THAT THE GOVERNMENT MAY HAVE FORMULATED, FURNISHED, OR IN ANY WAY SUPPLIED THE SAID DRAWINGS, SPECIFICATIONS, OR OTHER DATA IS NOT REGARDED BY IMPLICATION OR OTHERWISE AS IN ANY MANNER LICENSING THE HOLDER OR ANY OTHER PERSON OR CORPORATION, OR CONVEYING ANY RIGHTS OR PERMISSION TO MANUFACTURE, USE, OR SELL ANY PATENTED INVENTION THAT MAY IN ANY WAY BE RELATED THERETO.

DASH NO. 316 STEEL	DASH NO. AL6XN	TUBE SIZE REF	FITTING END TUBE SIZE	A ±.003	B +.005 -.000	C ±.003	D +.005 -.000	E ±.003	F ±.004	G ±.005	H +.000 -.003	J ±.005	K ±.005	L ±.005	M (REF)	N ±.005	P +.000 -.003	S +.000 -.015
K4A-6	L4A-6	1/4"X.035	3/8	.285	.255	.172	.258	.297	.434	.441	.502	.385	.382	.245	1.012	.350	.297	.236
K4A-8	L4A-8	1/4"X.035	1/2	.285	.255	.172	.258	.297	.564	.589	.682	.385	.420	.280	1.085	.350	.393	.282
K4A-12	L4A-12	1/4"X.035	3/4	.285	.255	.172	.258	.297	.828	.880	.972	.385	.496	.300	1.181	.350	.611	.315
K6A-8	L6A-8	3/8"X.035	1/2	.410	.380	.297	.383	.428	.564	.589	.682	.385	.446	.280	1.111	.350	.393	.282
K6A-12	L6A-12	3/8"X.035	3/4	.410	.380	.297	.383	.428	.828	.880	.972	.385	.522	.300	1.207	.350	.611	.315
K6C-8	L6C-8	3/8"X.058	1/2	.410	.380	.251	.383	.428	.564	.589	.682	.385	.446	.280	1.111	.350	.393	.255
K6C-12	L6C-12	3/8"X.058	3/4	.410	.380	.251	.383	.428	.828	.880	.972	.385	.522	.300	1.207	.350	.611	.288
K8B-12	L8B-12	1/2"X.049	3/4	.546	.506	.393	.509	.554	.828	.880	.972	.385	.548	.300	1.233	.350	.611	.299
K8B-16	L8B-16	1/2"X.049	1	.546	.506	.393	.509	.554	1.083	1.130	1.222	.385	.621	.400	1.406	.350	.801	.417
K8E-12	L8E-12	1/2"X.072	3/4	.546	.506	.347	.509	.554	.828	.880	.972	.385	.548	.300	1.233	.350	.611	.272
K8E-16	L8E-16	1/2"X.072	1	.546	.506	.347	.509	.554	1.083	1.130	1.222	.385	.621	.400	1.412	.350	.801	.391
K12D-16	L12D-16	3/4"X.065	1	.816	.756	.611	.759	.804	1.083	1.130	1.222	.535	.456	.400	1.391	.500	.801	.399
K12D-20	L12D-20	3/4"X.065	1-1/4	.816	.756	.611	.759	.804	1.341	1.412	1.536	.535	.530	.400	1.465	.500	1.184	.362
K12D-24	L12D-24	3/4"X.065	1-1/2	.816	.756	.611	.759	.804	1.611	1.630	1.786	.535	.608	.475	1.618	.500	1.444	.440
K12G-16	L12G-16	3/4"X.109	1	.816	.756	.523	.759	.804	1.083	1.130	1.222	.535	.456	.400	1.391	.500	.801	.348
K12G-20	L12G-20	3/4"X.109	1-1/4	.816	.756	.523	.759	.804	1.341	1.412	1.536	.535	.530	.400	1.465	.500	1.184	.312
K12G-24	L12G-24	3/4"X.109	1-1/2	.816	.756	.523	.759	.804	1.611	1.630	1.786	.535	.608	.475	1.618	.500	1.444	.389
K16F-20	L16F-20	1"X.095	1-1/4	1.066	1.006	.801	1.009	1.054	1.341	1.412	1.536	.535	.458	.400	1.393	.500	1.184	.328
K16F-24	L16F-24	1"X.095	1-1/2	1.066	1.006	.801	1.009	1.054	1.611	1.630	1.786	.535	.536	.475	1.546	.500	1.444	.406
K16H-20	L16H-20	1"X.120	1-1/4	1.066	1.006	.751	1.009	1.054	1.341	1.412	1.536	.535	.458	.400	1.393	.500	1.184	.299
K16H-24	L16H-24	1"X.120	1-1/2	1.066	1.006	.751	1.009	1.054	1.611	1.630	1.786	.535	.536	.475	1.546	.500	1.444	.377
K20B-24	L20B-24	1-1/4"X.049	1-1/2	1.330	1.256	1.143	1.259	1.304	1.611	1.630	1.786	.535	.526	.475	1.536	.500	1.444	.459
K20J-24	L20J-24	1-1/4"X.134	1-1/2	1.330	1.256	.973	1.259	1.304	1.611	1.630	1.786	.535	.526	.475	1.536	.500	1.444	.361
K24B-32	L24B-32	1-1/2"X.049	2	1.605	1.511	1.398	1.514	1.559	2.161	2.195	2.411	.535	.611	.540	1.686	.500	1.856	.564
K24L-32	L24L-32	1-1/2"X.188	2	1.605	1.511	1.218	1.514	1.559	2.161	2.195	2.411	.535	.611	.540	1.686	.500	1.856	.404

APPROVED: 5-1-90 REVISED: ADDED CODE "L" MATERIAL DASH NO. 5-1-87

CUSTODIAN: JOHN F. KENNEDY SPACE CENTER

PROCUREMENT SPEC. KSC-F-124

COORDINATION STATUS KSC DE

KSC FORM 32-85 (CG 4/92)

SPUD, BUTTWELD TUBE REDUCER - ADAPTER

STANDARD PART

KC151

SHEET 2 OF 2

GP425G AMEND 1

FED SUP CLASS 4730

GP425G AMEND 2

FED SUP CLASS
4730

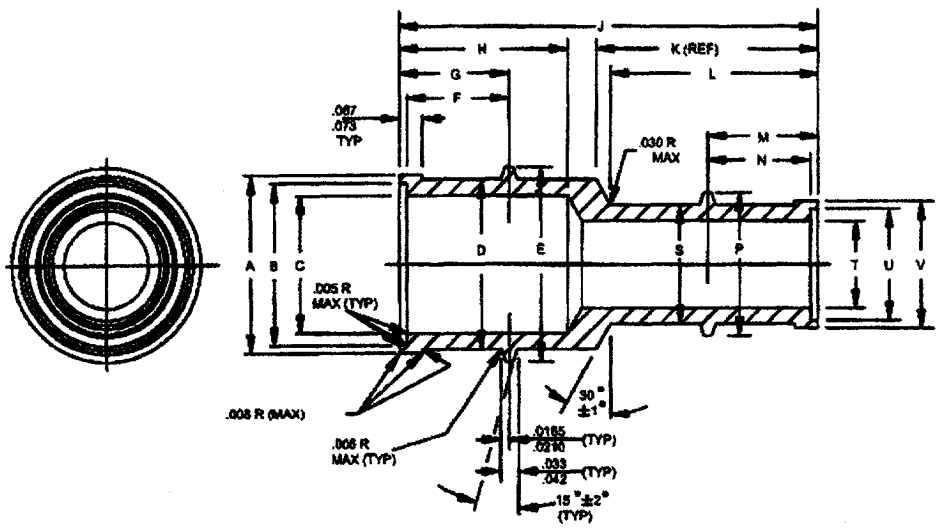

SCHEDULE:

ADD "A" AFTER DASH NUMBER TO DENOTE .035" TUBE WALL.
ADD "B" AFTER DASH NUMBER TO DENOTE .049" TUBE WALL.
ADD "C" AFTER DASH NUMBER TO DENOTE .058" TUBE WALL.
ADD "D" AFTER DASH NUMBER TO DENOTE .065" TUBE WALL.
ADD "E" AFTER DASH NUMBER TO DENOTE .072" TUBE WALL.
ADD "F" AFTER DASH NUMBER TO DENOTE .095" TUBE WALL.
ADD "G" AFTER DASH NUMBER TO DENOTE .109" TUBE WALL.
ADD "H" AFTER DASH NUMBER TO DENOTE .120" TUBE WALL.
ADD "J" AFTER DASH NUMBER TO DENOTE .134" TUBE WALL.
ADD "K" AFTER DASH NUMBER TO DENOTE .156" TUBE WALL.
ADD "L" AFTER DASH NUMBER TO DENOTE .188" TUBE WALL.

MATERIAL:

SEE PROCUREMENT SPECIFICATION.
CORROSION RESISTANT STEEL (CLASS 316), CODE "K"
CORROSION RESISTANT STEEL (AL6XN), CODE "L" PER ASTM -B691

FINISH:

1. SURFACE SHALL BE 125 RMS MAXIMUM PER ANSI B46.1 UNLESS OTHERWISE SPECIFIED.

NOTES:

2. REMOVE BURRS AND SLIVERS. BREAK SHARP EDGES UNLESS OTHERWISE NOTED.
3. DIMENSIONS IN INCHES. UNLESS OTHERWISE SPECIFIED, TOLERANCE DECIMALS ±.016.
4. FOR DESIGN FEATURE PURPOSES, THIS DRAWING TAKES PRECEDENCE OVER PROCUREMENT DOCUMENTS REFERENCED HEREIN.
5. REFERENCED DOCUMENTS SHALL BE OF THE ISSUE IN EFFECT ON THE DATE OF INVITATION FOR BID.
6. MARKING OF FITTINGS SHALL BE CONSISTANT WITH PROCUREMENT SPECIFICATION USING APPLICABLE KC STANDARD AND PART NUMBER DESIGNATIONS AS SHOWN ON THIS DRAWING.
7. ALL DIAMETRAL DIMENSIONS SHALL BE CONCENTRIC WITH "C" BORE WITHIN .005 T.I.R.
8. FITTINGS PROVIDED HEREIN SHALL BE WELDED TO CORRESPONDING TUBE SIZES USING AUTOMATIC WELDING EQUIPMENT (ASTRO-ARC CO. OR EQUIVALENT). AFTER MACHINING, THE CODE L FITTINGS SHALL BE PICKLED IN ACCORDANCE WITH ASTM A380 CODE B AND THEN PASSIVATED IN ACCORDANCE WITH SAE-AMS-2700 METHOD 1 TYPE 6, EXCEPT THAT 20% TO 25% NITRIC ACID SOLUTION SHALL BE USED. A TEST FOR SURFACE PASSIVITY SHALL BE DONE IN ACCORDANCE WITH SAE-AMS-2700 TEST METHOD 102 - COPPER SULFATE TEST.
9. DO NOT USE SIZES MANUFACTURED PRIOR TO GP425 REVG AMEND 2
10. THE INTERNAL DIAMETER SHALL END IN A CONICAL END OF 115 DEGREE MINIMUM INCLUDED ANGLE

EXAMPLE OF PART NOS.

KC152K6B-4A = UNION, BUTTWELD REDUCER, 1/2" X .049 WALL TUBE TO 1/4" X .035 WALL TUBE, TYPE 316 SS.
KC152L6C-4A = UNION, BUTTWELD REDUCER, 3/8" X .058 WALL TUBE TO 1/4" X .035 WALL TUBE, AL6XN.

REVISED: CHANGED "H" DIMENSION AND ADDED NOTE 9, SEE APPENDIX A 2-6-09

APPROVED: 2-6-09

CUSTODIAN: JOHN F. KENNEDY SPACE CENTER		
PROCUREMENT SPEC. KSC-F-124	UNION, BUTTWELD REDUCER	STANDARD PART
COORDINATION STATUS KSC DE		KC152
		SHEET 1 OF 3

KSC FORM 32-86 (CG 4/92)

NOTICE: WHEN GOVERNMENT DRAWINGS, SPECIFICATIONS OR OTHER DATA ARE USED FOR ANY PURPOSE OTHER THAN IN CONNECTION WITH A DEFINITELY RELATED GOVERNMENT PROCUREMENT OPERATION, THE UNITED STATES GOVERNMENT THEREBY INCURS NO RESPONSIBILITY NOR ANY OBLIGATION WHATSOEVER AND THE FACT THAT THE GOVERNMENT MAY HAVE FORMULATED, FURNISHED, OR IN ANY WAY SUPPLIED THE SAID DRAWINGS, SPECIFICATIONS, OR OTHER DATA IS NOT REGARDED BY IMPLICATION OR OTHERWISE AS IN ANY MANNER LICENSING THE HOLDER OR ANY OTHER PERSON OR CORPORATION, OR CONVEYING ANY RIGHTS OR PERMISSION TO MANUFACTURE, USE, OR SELL ANY PATENTED INVENTION THAT MAY IN ANY WAY BE RELATED THERETO.

NOTICE: WHEN GOVERNMENT DRAWINGS, SPECIFICATIONS OR OTHER DATA ARE USED FOR ANY PURPOSE OTHER THAN IN CONNECTION WITH A DEFINITELY RELATED GOVERNMENT PROCUREMENT OPERATION, THE UNITED STATES GOVERNMENT THEREBY INCURS NO RESPONSIBILITY NOR ANY OBLIGATION WHATSOEVER AND THE FACT THAT THE GOVERNMENT MAY HAVE FORMULATED, FURNISHED, OR IN ANY WAY SUPPLIED THE SAID DRAWINGS, SPECIFICATIONS, OR OTHER DATA IS NOT REGARDED BY IMPLICATION OR OTHERWISE AS IN ANY MANNER LICENSING THE HOLDER OR ANY OTHER PERSON OR CORPORATION, OR CONVEYING ANY RIGHTS OR PERMISSION TO MANUFACTURE, USE, OR SELL ANY PATENTED INVENTION THAT MAY IN ANY WAY BE RELATED THERETO.

DASH NO. 316 STEEL	DASH NO. ALSION	TUBE SIZE LARGE END	TUBE SIZE SMALL END	A ±.003	B +.005 -.000	C ±.003	D +.005 -.000	E ±.003	F ±.005	G ±.005	H ±.005	J ±.005	K (REF)	L ±.005	M ±.005	N ±.005	P ±.003	S +.005 -.000	T ±.003	U +.005 -.000	V ±.003
K8A-4A	L8A-4A	3/8"X.035	1/4"X.035	.410	.388	.297	.383	.428	.350	.385	.558	1.265	.692	.656	.385	.350	.297	.258	.172	.255	.285
K8C-4A	L8C-4A	3/8"X.058	1/4"X.035	.410	.388	.251	.383	.428	.350	.385	.536	1.295	.692	.656	.385	.350	.297	.258	.172	.255	.285
K8B-4A	L8B-4A	1/2"X.049	1/4"X.035	.546	.506	.393	.509	.554	.350	.385	.604	1.364	.728	.656	.385	.350	.297	.258	.172	.255	.285
K8B-6A	L8B-6A	1/2"X.049	3/8"X.035	.546	.506	.393	.509	.554	.350	.385	.604	1.409	.754	.718	.385	.350	.428	.383	.297	.380	.410
K8E-4A	L8E-4A	1/2"X.072	1/4"X.035	.546	.506	.347	.509	.554	.350	.385	.584	1.383	.728	.656	.385	.350	.297	.258	.172	.255	.285
K8E-6C	L8E-6C	1/2"X.072	3/8"X.058	.546	.506	.347	.509	.554	.350	.385	.584	1.409	.754	.718	.385	.350	.428	.383	.251	.380	.410
K12D-4A	L12D-4A	3/4"X.065	1/4"X.035	.816	.756	.611	.759	.804	.500	.535	.804	1.689	.801	.656	.385	.350	.297	.258	.172	.255	.285
K12D-6A	L12D-6A	3/4"X.065	3/8"X.035	.816	.756	.611	.759	.804	.500	.535	.804	1.695	.827	.718	.385	.350	.428	.383	.297	.380	.410
K12D-8B	L12D-8B	3/4"X.065	1/2"X.049	.816	.756	.611	.759	.804	.500	.535	.804	1.720	.852	.780	.385	.350	.554	.509	.393	.506	.546
K12G-4A	L12G-4A	3/4"X.109	1/4"X.035	.816	.756	.523	.759	.804	.500	.535	.766	1.689	.901	.656	.385	.350	.297	.258	.172	.255	.285
K12G-6C	L12G-6C	3/4"X.109	3/8"X.058	.816	.756	.523	.759	.804	.500	.535	.766	1.695	.827	.718	.385	.350	.428	.383	.251	.380	.410
K12G-8E	L12G-8E	3/4"X.109	1/2"X.072	.816	.756	.523	.759	.804	.500	.535	.766	1.720	.852	.780	.385	.350	.554	.509	.347	.506	.546
K16F-4A	L16F-4A	1"X.095	1/4"X.035	1.066	1.006	.801	1.009	1.054	.500	.535	.778	1.741	.873	.656	.385	.350	.297	.258	.172	.255	.285
K16F-6A	L16F-6A	1"X.095	3/8"X.035	1.066	1.006	.801	1.009	1.054	.500	.535	.778	1.767	.899	.718	.385	.350	.428	.383	.297	.380	.410
K16F-8B	L16F-8B	1"X.095	1/2"X.049	1.066	1.006	.801	1.009	1.054	.500	.535	.778	1.792	.924	.780	.385	.350	.554	.509	.393	.506	.546
K16F-12D	L16F-12D	1"X.095	3/4"X.065	1.066	1.006	.801	1.009	1.054	.500	.535	.778	1.868	.940	.868	.535	.500	.804	.759	.611	.756	.816
K16H-4A	L16H-4A	1"X.120	1/4"X.035	1.066	1.006	.751	1.009	1.054	.500	.535	.755	1.741	.873	.656	.385	.350	.297	.258	.172	.255	.285
K16H-8E	L16H-8E	1"X.120	1/2"X.072	1.066	1.006	.751	1.009	1.054	.500	.535	.755	1.792	.924	.780	.385	.350	.554	.509	.347	.506	.546
K16H-12G	L16H-12G	1"X.120	3/4"X.109	1.066	1.006	.751	1.009	1.054	.500	.535	.755	1.868	.940	.868	.535	.500	.804	.759	.523	.756	.816
K20B-4A	L20B-4A	1-1/4"X.049	1/4"X.035	1.330	1.256	1.143	1.259	1.304	.500	.535	.880	1.875	.945	.656	.385	.350	.297	.258	.172	.255	.285
K20B-12D	L20B-12D	1-1/4"X.049	3/4"X.065	1.330	1.256	1.143	1.259	1.304	.500	.535	.880	1.942	1.012	.868	.535	.500	.804	.759	.611	.756	.816
K20B-16F	L20B-16F	1-1/4"X.049	1"X.095	1.330	1.256	1.143	1.259	1.304	.500	.535	.880	1.870	.940	.868	.535	.500	1.054	1.009	.801	1.006	1.066
K20J-4A	L20J-4A	1-1/4"X.134	1/4"X.035	1.330	1.256	.973	1.259	1.304	.500	.535	.804	1.875	.945	.656	.385	.350	.297	.258	.172	.255	.285
K20J-8E	L20J-8E	1-1/4"X.134	1/2"X.072	1.330	1.256	.973	1.259	1.304	.500	.535	.804	1.827*	.997	.780	.385	.350	.554	.509	.347	.506	.546
K20J-12G	L20J-12G	1-1/4"X.134	3/4"X.109	1.330	1.256	.973	1.259	1.304	.500	.535	.804	1.942	1.012	.868	.535	.500	.804	.759	.523	.756	.816

APPROVED: 2-6-09

REVISED: CHANGED "H" DIMENSION AND ADDED NOTE 9. SEE APPENDIX A 2-6-09

GP425G AMEND 2

FED SUP CLASS 4730

CUSTODIAN: JOHN F. KENNEDY SPACE CENTER

PROCUREMENT SPEC. KSC-F-124

COORDINATION STATUS KSC DE

UNION, BUTTWELD REDUCER

STANDARD PART

KC152

SHEET 2 OF 3

KSC FORM 32-85 (CG 4/92)

NOTICE: WHEN GOVERNMENT DRAWINGS, SPECIFICATIONS OR OTHER DATA ARE USED FOR ANY PURPOSE OTHER THAN IN CONNECTION WITH A DEFINITELY RELATED GOVERNMENT PROCUREMENT OPERATION, THE UNITED STATES GOVERNMENT THEREBY INCURS NO RESPONSIBILITY NOR ANY OBLIGATION WHATSOEVER AND THE FACT THAT THE GOVERNMENT MAY HAVE FORMULATED, FURNISHED, OR IN ANY WAY SUPPLIED THE SAID DRAWINGS, SPECIFICATIONS, OR OTHER DATA IS NOT REGARDED BY IMPLICATION OR OTHERWISE AS IN ANY MANNER LICENSING THE HOLDER OR ANY OTHER PERSON OR CORPORATION, OR CONVEYING ANY RIGHTS OR PERMISSION TO MANUFACTURE, USE, OR SELL ANY PATENTED INVENTION THAT MAY IN ANY WAY BE RELATED THERETO.

DASH NO. 316 STEEL	DASH NO. AL6XN	TUBE SIZE LARGE END	TUBE SIZE SMALL END	A ±.003	B +.005 -.000	C ±.003	D +.005 -.000	E ±.003	F ±.005	G ±.005	H ±.005	J ±.005	K (REF)	L ±.005	M ±.005	N ±.005	P ±.003	S +.005 -.000	T ±.003	U +.005 -.005	V ±.003
K20J-16H	L20J-16H	1-1/4"X.134	1"X.120	1.330	1.256	.973	1.259	1.394	.500	.535	.804	1.870*	.940	.868	.535	.500	1.054	1.009	.751	1.006	1.066
K24B-4A	L24B-4A	1-1/2"X.049	1/4"X.035	1.605	1.511	1.398	1.514	1.559	.500	.535	.860	1.949*	1.019	.555	.385	.350	.297	.256	.172	.256	.286
K24B-12D	L24B-12D	1-1/2"X.049	3/4"X.065	1.605	1.511	1.398	1.514	1.559	.500	.535	.860	2.016*	1.098	.868	.535	.500	.804	.759	.611	.756	.816
K24B-16F	L24B-16F	1-1/2"X.049	1"X.085	1.605	1.511	1.398	1.514	1.559	.500	.535	.860	1.944	1.014	.868	.535	.500	1.054	1.009	.901	1.006	1.066
K24B-20B	L24B-20B	1-1/2"X.049	1-1/4"X.049	1.605	1.511	1.398	1.514	1.559	.500	.535	.860	1.934	1.004	.930	.535	.500	1.304	1.259	1.143	1.256	1.330
K24L-4A	L24L-4A	1-1/2"X.188	1/4"X.035	1.605	1.511	1.110	1.514	1.559	.500	.535	.755	1.866	.966	.563	.385	.350	.297	.256	.172	.256	.286
K24L-16H	L24L-16H	1-1/2"X.188	1"X.120	1.605	1.511	1.110	1.514	1.559	.500	.535	.755	1.944	1.014	.868	.535	.500	1.054	1.009	.751	1.006	1.066
K24L-20J	L24L-20J	1-1/2"X.188	1-1/4"X.134	1.605	1.511	1.110	1.514	1.559	.500	.535	.755	1.934	1.004	.930	.535	.500	1.304	1.259	.973	1.256	1.330
K32D-4A	L32D-4A	2"X.065	1/4"X.035	2.105	2.011	1.656	2.014	2.059	.500	.535	.861	2.092	1.183	.555	.385	.350	.297	.256	.172	.256	.286
K32D-20B	L32D-20B	2"X.065	1-1/4"X.049	2.105	2.011	1.656	2.014	2.059	.500	.535	.861	2.076	1.148	.930	.535	.500	1.304	1.259	1.143	1.256	1.330
K32D-24B	L32D-24B	2"X.065	1-1/2"X.049	2.105	2.011	1.656	2.014	2.059	.500	.535	.861	2.004	1.074	.930	.535	.500	1.559	1.514	1.398	1.511	1.606
K32L-4A	L32L-4A	2"X.188	1/4"X.035	2.105	2.011	1.612	2.014	2.059	.500	.535	.756	2.093*	1.163	.555	.385	.350	.297	.256	.172	.256	.286
K32L-20J	L32L-20J	2"X.188	1-1/4"X.134	2.105	2.011	1.612	2.014	2.059	.500	.535	.756	2.076	1.148	.930	.535	.500	1.304	1.259	.973	1.256	1.330
K32L-24L	L32L-24L	2"X.188	1-1/2"X.188	2.105	2.011	1.612	2.014	2.059	.500	.535	.756	2.004	1.074	.930	.535	.500	1.559	1.514	1.110	1.511	1.606

GP425G AMEND 2

FED SUP CLASS 4730

APPROVED: 2-6-09

REVISED. CHANGED "H" DIMENSION AND ADDED NOTE 9, SEE APPENDIX A 2-6-09

CUSTODIAN: JOHN F. KENNEDY SPACE CENTER

PROCUREMENT SPEC. KSC-F-124

COORDINATION STATUS KSC DE

UNION, BUTTWELD REDUCER

STANDARD PART

KC152

SHEET 3 OF 3

KSC FORM 32-86 (CG 4/92)

FED SUP CLASS
4730

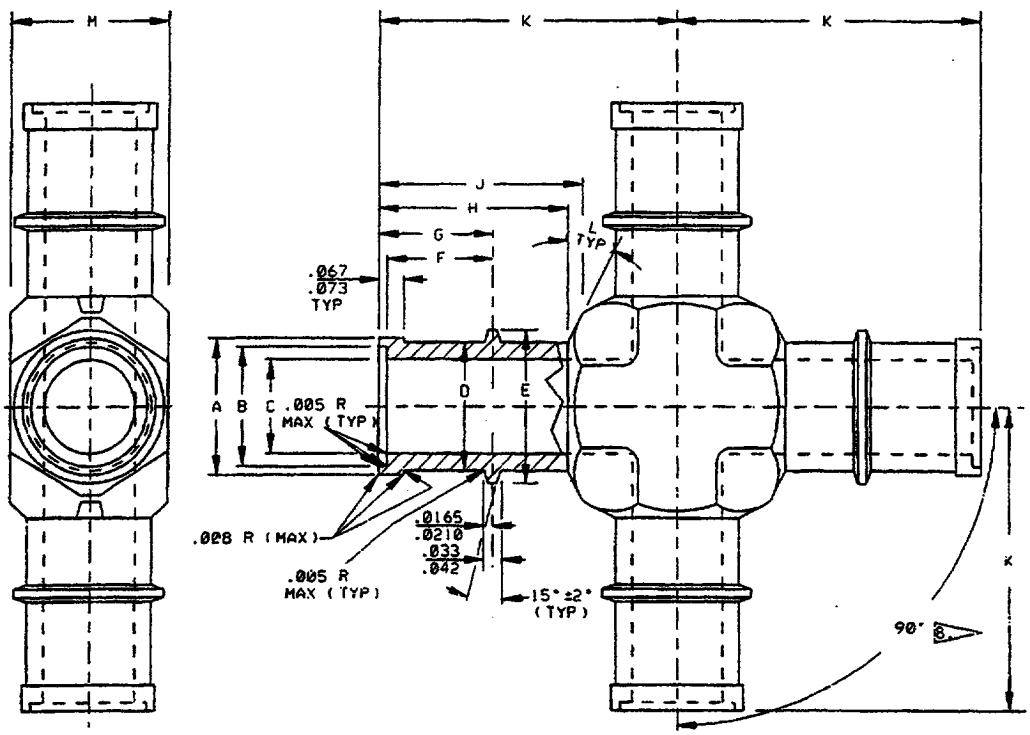

REVISED:

APPROVED: 5-1-90

NOTICE: WHEN GOVERNMENT DRAWINGS, SPECIFICATIONS OR OTHER DATA ARE USED FOR ANY PURPOSE OTHER THAN IN CONNECTION WITH A DEFINITELY RELATED GOVERNMENT PROCUREMENT OPERATION, THE UNITED STATES GOVERNMENT THEREBY INCURS NO RESPONSIBILITY NOR ANY OBLIGATION WHATSOEVER AND THE FACT THAT THE GOVERNMENT MAY HAVE FORMULATED, FURNISHED, OR IN ANY WAY SUPPLIED THE SAID DRAWINGS, SPECIFICATIONS, OR OTHER DATA IS NOT REGARDED BY IMPLICATION OR OTHERWISE AS IN ANY MANNER LICENSING THE HOLDER OR ANY OTHER PERSON OR CORPORATION, OR CONVEYING ANY RIGHTS OR PERMISSION TO MANUFACTURE, USE, OR SELL ANY PATENTED INVENTION THAT MAY IN ANY WAY BE RELATED THERETO.

CUSTODIAN:	JOHN F. KENNEDY SPACE CENTER	
PROCUREMENT SPEC. KSC-F-124	CROSS, BUTTWELD TUBE	STANDARD PART
COORDINATION STATUS		KC153
KSC DE		SHEET 1 OF 3

KSC FORM 32-85 (CG 4/92)

FED SUP CLASS
4730

SCHEDULE:
ADD "A" AFTER DASH NUMBER TO DENOTE .035" TUBE WALL.
ADD "B" AFTER DASH NUMBER TO DENOTE .049" TUBE WALL.
ADD "C" AFTER DASH NUMBER TO DENOTE .058" TUBE WALL.
ADD "D" AFTER DASH NUMBER TO DENOTE .065" TUBE WALL.
ADD "E" AFTER DASH NUMBER TO DENOTE .072" TUBE WALL.
ADD "F" AFTER DASH NUMBER TO DENOTE .095" TUBE WALL.
ADD "G" AFTER DASH NUMBER TO DENOTE .109" TUBE WALL.
ADD "H" AFTER DASH NUMBER TO DENOTE .120" TUBE WALL
ADD "J" AFTER DASH NUMBER TO DENOTE .134" TUBE WALL.
ADD "K" AFTER DASH NUMBER TO DENOTE .156" TUBE WALL.
ADD "L" AFTER DASH NUMBER TO DENOTE .188" TUBE WALL.

MATERIAL: SEE PROCUREMENT SPECIFICATION.
CORROSION RESISTANT STEEL (CLASS 316), CODE "K"

FINISH: SURFACE SHALL BE 125 RMS MAXIMUM PER ANSI B46.1 UNLESS OTHERWISE SPECIFIED.

NOTES:
1. REMOVE BURRS AND SLIVERS. BREAK SHARP EDGES UNLESS OTHERWISE NOTED.
2. DIMENSIONS IN INCHES. UNLESS OTHERWISE SPECIFIED, TOLERANCE DECIMALS ±.016.
3. FOR DESIGN FEATURE PURPOSES, THIS DRAWING TAKES PRECEDENCE OVER PROCUREMENT DOCUMENTS REFERENCED HEREIN.
4. REFERENCED DOCUMENTS SHALL BE OF THE ISSUE IN EFFECT ON THE DATE OF INVITATION FOR BID.
5. MARKING OF FITTINGS SHALL BE CONSISTANT WITH PROCUREMENT SPECIFICATION USING APPLICABLE KC STANDARD AND PART NUMBER DESIGNATIONS AS SHOWN ON THIS DRAWING.
6. ALL DIAMETRAL DIMENSIONS SHALL BE CONCENTRIC WITH "C" BORE WITHIN .005 T.I.R.
7. FITTINGS PROVIDED HEREIN SHALL BE WELDED TO CORRESPONDING TUBE SIZES USING AUTOMATIC WELDING EQUIPMENT (ASTRO-ARC CO. OR EQUIVALENT).
8. FOR TUBE SIZES UP TO AND INCLUDING .375" OD, TOLERANCE IS ±2-1/2°. FOR ALL OTHERS, TOLERANCE IS ±1-1/2°.

EXAMPLE OF PART NOS. KC153K4A = CROSS, BUTTWELD TUBE, FOR ¼" X .035 WALL TUBING.

DASH NO.	TUBE SIZE REF	A ±.003	B +.005 -.000	C ±.003	D +.005 -.000	E ±.003	F ±.005	G ±.005	H +.015 -.005	J (REF)	K ±.016	L (REF)	M (REF)	R ±.005
K4A	¼" X .035	.285	.255	.172	.258	.297	.350	.385	.656	.680	.920	15	.438	.030
K6A	⅜" X .035	.410	.380	.297	.383	.428	.350	.385	.718	.742	1.110	15	.563	.030
K6C	⅜" X .058	.410	.380	.251	.383	.428	.350	.385	.718	.742	1.110	15	.563	.030
K8B	½" X .049	.546	.506	.393	.509	.554	.350	.385	.780	.812	1.280	15	.750	.030
K8E	½" X .072	.546	.506	.347	.509	.554	.350	.385	.780	.812	1.280	15	.750	.030
K12D	¾" X .065	.816	.756	.611	.759	.804	.500	.535	.868	.909	1.640	15	1.063	.030
K12G	¾" X .109	.816	.756	.523	.759	.804	.500	.535	.868	.909	1.640	15	1.063	.030
K16F	1" X .095	1.066	1.006	.801	1.009	1.054	.500	.535	.868	.909	1.810	15	1.313	.030
K16H	1" X .120	1.066	1.006	.751	1.009	1.054	.500	.535	.868	.909	1.810	15	1.313	.030
K20B	1¼" X .049	1.330	1.256	1.143	1.259	1.304	.500	.535	.930	1.036	2.090	30	1.625	.060
K20J	1¼" X .134	1.330	1.256	.973	1.259	1.304	.500	.535	.930	1.036	2.090	30	1.625	.060
K24B	1½" X .049	1.605	1.511	1.398	1.514	1.559	.500	.535	.930	1.034	2.280	30	1.875	.060
K24J	1½" X .134	1.605	1.511	1.218	1.514	1.559	.500	.535	.930	1.034	2.280	30	1.875	.060
K24K	1½" X .156	1.605	1.511	1.174	1.514	1.559	.500	.535	.930	1.034	2.280	30	1.875	.060
K24L	1½" X .188	1.605	1.511	1.120	1.514	1.559	.500	.535	.930	1.034	2.280	30	1.875	.060
K32D	2" X .065	2.105	2.011	1.866	2.014	2.059	.500	.535	1.055	1.298	3.060	45	2.500	.375
K32L	2" X .188	2.105	2.011	1.620	2.014	2.059	.500	.535	1.055	1.298	3.060	45	2.500	.375

REVISED: 0
APPROVED: 5-1-90

CUSTODIAN: JOHN F. KENNEDY SPACE CENTER

PROCUREMENT SPEC. KSC-F-124

COORDINATION STATUS KSC DE

CROSS, BUTTWELD TUBE

STANDARD PART KC153

SHEET 2 OF 3

KSC FORM 32-85 (CG 4/92)

NOTICE: WHEN GOVERNMENT DRAWINGS, SPECIFICATIONS OR OTHER DATA ARE USED FOR ANY PURPOSE OTHER THAN IN CONNECTION WITH A DEFINITELY RELATED GOVERNMENT PROCUREMENT OPERATION, THE UNITED STATES GOVERNMENT THEREBY INCURS NO RESPONSIBILITY NOR ANY OBLIGATION WHATSOEVER AND THE FACT THAT THE GOVERNMENT MAY HAVE FORMULATED, FURNISHED, OR IN ANY WAY SUPPLIED THE SAID DRAWINGS, SPECIFICATIONS, OR OTHER DATA IS NOT REGARDED BY IMPLICATION OR OTHERWISE AS IN ANY MANNER LICENSING THE HOLDER OR ANY OTHER PERSON OR CORPORATION, OR CONVEYING ANY RIGHTS OR PERMISSION TO MANUFACTURE, USE, OR SELL ANY PATENTED INVENTION THAT MAY IN ANY WAY BE RELATED THERETO.

FED SUP CLASS
4730

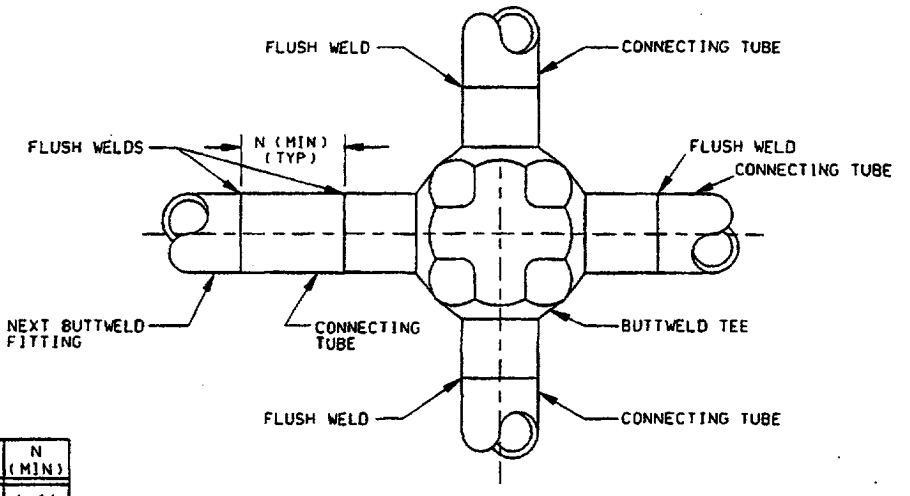

TUBE SIZE REF	N (MIN)
¼"	1.44
⅜"	1.44
½"	1.44
¾"	1.44
1"	1.44
1¼"	1.63
1½"	1.63
2" X .065	1.75
2" X .188	4.25

BUTTWELD CROSS APPLICATION DATA

REVISED:

APPROVED: 5-1-90

CUSTODIAN: JOHN F. KENNEDY SPACE CENTER

PROCUREMENT SPEC. KSC-F-124

COORDINATION STATUS KSC DE

CROSS, BUTTWELD TUBE

STANDARD PART

KC153

SHEET 3 OF 3

KSC FORM 32-85 (CG 4/92)

NOTICE: WHEN GOVERNMENT DRAWINGS, SPECIFICATIONS OR OTHER DATA ARE USED FOR ANY PURPOSE OTHER THAN IN CONNECTION WITH A DEFINITELY RELATED GOVERNMENT PROCUREMENT OPERATION, THE UNITED STATES GOVERNMENT THEREBY INCURS NO RESPONSIBILITY NOR ANY OBLIGATION WHATSOEVER AND THE FACT THAT THE GOVERNMENT MAY HAVE FORMULATED, FURNISHED, OR IN ANY WAY SUPPLIED THE SAID DRAWINGS, SPECIFICATIONS, OR OTHER DATA IS NOT REGARDED BY IMPLICATION OR OTHERWISE AS IN ANY MANNER LICENSING THE HOLDER OR ANY OTHER PERSON OR CORPORATION, OR CONVEYING ANY RIGHTS OR PERMISSION TO MANUFACTURE, USE, OR SELL ANY PATENTED INVENTION THAT MAY IN ANY WAY BE RELATED THERETO.

NOTICE: WHEN GOVERNMENT DRAWINGS, SPECIFICATIONS OR OTHER DATA ARE USED FOR ANY PURPOSE OTHER THAN IN CONNECTION WITH A DEFINITELY RELATED GOVERNMENT PROCUREMENT OPERATION, THE UNITED STATES GOVERNMENT THEREBY INCURS NO RESPONSIBILITY NOR ANY OBLIGATION WHATSOEVER AND THE FACT THAT THE GOVERNMENT MAY HAVE FORMULATED, FURNISHED, OR IN ANY WAY SUPPLIED THE SAID DRAWINGS, SPECIFICATIONS, OR OTHER DATA IS NOT REGARDED BY IMPLICATION OR OTHERWISE AS IN ANY MANNER LICENSING THE HOLDER OR ANY OTHER PERSON OR CORPORATION, OR CONVEYING ANY RIGHTS OR PERMISSION TO MANUFACTURE, USE, OR SELL ANY PATENTED INVENTION THAT MAY IN ANY WAY BE RELATED THERETO.

FED SUP CLASS
NONE

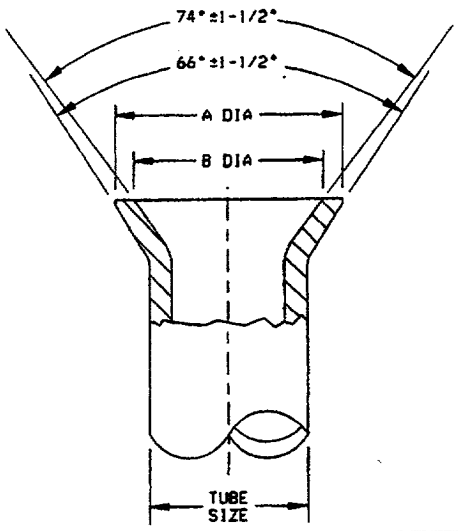

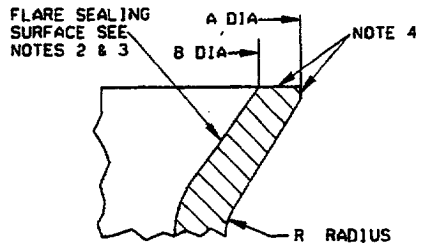

ENLARGED VIEW

TUBE OD REF	A DIA		B DIA MIN	R TOL.	R RAD
1/8	.200	±.010	.140	±.015	.032
3/16	.302		.245		
1/4	.359		.300		
5/16	.421		.320		
3/8	.484		.440		.046
1/2	.656		.555		.062
5/8	.781		.665		
3/4	.937		.800		.078
1	1.187	±.015	1.080	+.020 -.010	.093
1 1/4	1.500		1.400		
1 1/2	1.721		1.600		.109
1 3/4	2.106		1.850		
2	2.356		2.100		

NOTES:

1. THIS DESIGN STANDARD ESTABLISHES DIMENSIONS GOVERNING THE FORMING OF TUBE FLARES THAT ARE TO BE USED WITH STANDARD FLARED TUBE FITTINGS WITH SEAL RINGS.
2. THE MINIMUM FLARE SEALING SURFACE AS DEFINED BY DIAMETER B AND 74°±1-1/2° CONE SHALL BE CONCENTRIC WITH THE OUTSIDE DIAMETER OF THE TUBE WITHIN .007 FULL INDICATOR READING.
3. THE FLARE SEALING SURFACE SHALL NOT EXHIBIT CONCAVE AREAS EXCEEDING .001 OR CONVEX AREAS EXCEEDING .002. SURFACE ROUGHNESS SHALL NOT EXCEED 63√ IN ACCORDANCE WITH ANSI B46.1.
4. DEBURR EDGES OF TUBING BEFORE FLARING; RADIUS OR CHAMFER EDGE OF ID .010 MAX AND EDGE OF OD 20% TO 50% OF TUBING WALL THICKNESS. EDGES TO BE FREE OF CHATTER MARKS.
5. DIMENSIONS ARE IN INCHES.

APPROVED: 8-12-65
REVISED: (D) REV NOTE 2, 4-10-91

CUSTODIAN: JOHN F. KENNEDY SPACE CENTER

PROCUREMENT SPEC. NONE

COORDINATION STATUS KSC DE

TUBING, FLARED
STANDARD DIMENSIONS FOR

DESIGN STANDARD
KC154

SHEET 1 OF 1

KSC FORM 32-85 (CG 4/92)

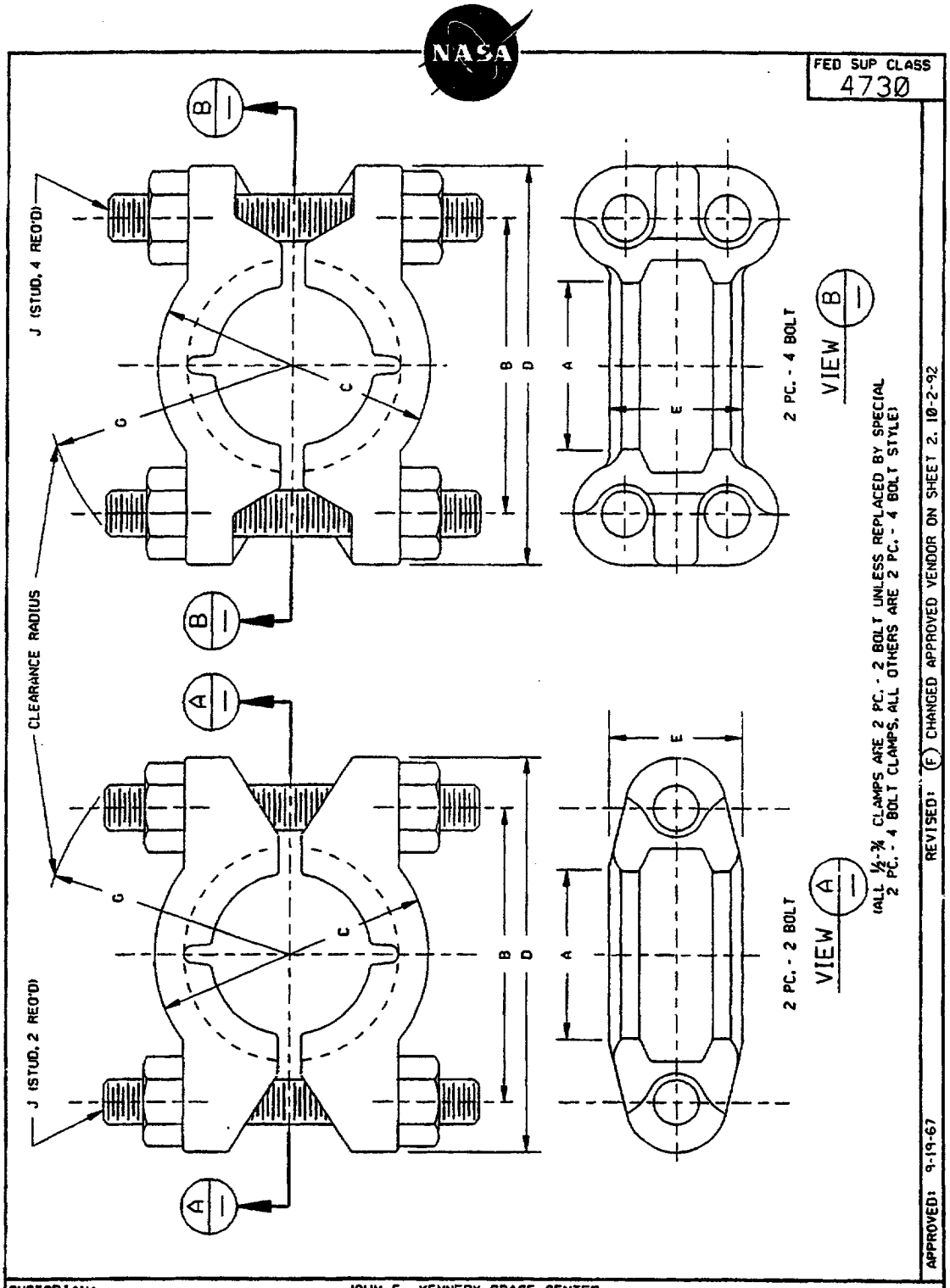

FED SUP CLASS
4730

APPROVED: 9-19-67

REVISED: (F) CHANGED APPROVED VENDOR ON SHEET 2. 10-2-92

CUSTODIAN: JOHN F. KENNEDY SPACE CENTER

PROCUREMENT SPEC. NONE	CLAMP ASSEMBLY	STANDARD PART
COORDINATION STATUS		KC155
KSC DE		SHEET 1 OF 3

KSC FORM 32-85 (CG 4/92)

NOTICE: WHEN GOVERNMENT DRAWINGS, SPECIFICATIONS OR OTHER DATA ARE USED FOR ANY PURPOSE OTHER THAN IN CONNECTION WITH A DEFINITELY RELATED GOVERNMENT PROCUREMENT OPERATION, THE UNITED STATES GOVERNMENT THEREBY INCURS NO RESPONSIBILITY NOR ANY OBLIGATION WHATSOEVER AND THE FACT THAT THE GOVERNMENT MAY HAVE FORMULATED, FURNISHED, OR IN ANY WAY SUPPLIED THE SAID DRAWINGS, SPECIFICATIONS, OR OTHER DATA IS NOT REGARDED BY IMPLICATION OR OTHERWISE AS IN ANY MANNER LICENSING THE HOLDER OR ANY OTHER PERSON OR CORPORATION, OR CONVEYING ANY RIGHTS OR PERMISSION TO MANUFACTURE, USE, OR SELL ANY PATENTED INVENTION THAT MAY IN ANY WAY BE RELATED THERETO.

NOTICE: WHEN GOVERNMENT DRAWINGS, SPECIFICATIONS OR OTHER DATA ARE USED FOR ANY PURPOSE OTHER THAN IN CONNECTION WITH A DEFINITELY RELATED GOVERNMENT PROCUREMENT OPERATION, THE UNITED STATES GOVERNMENT THEREBY INCURS NO RESPONSIBILITY NOR ANY OBLIGATION WHATSOEVER AND THE FACT THAT THE GOVERNMENT MAY HAVE FORMULATED, FURNISHED, OR IN ANY WAY SUPPLIED THE SAID DRAWINGS, SPECIFICATIONS, OR OTHER DATA IS NOT REGARDED BY IMPLICATION OR OTHERWISE AS IN ANY MANNER LICENSING THE HOLDER OR ANY OTHER PERSON OR CORPORATION, OR CONVEYING ANY RIGHTS OR PERMISSION TO MANUFACTURE, USE, OR SELL ANY PATENTED INVENTION THAT MAY IN ANY WAY BE RELATED THERETO.

FED SUP CLASS
4730

MATERIAL CODE: CLAMP HALVES SHALL BE IN ACCORDANCE WITH MATERIAL CODES SHOWN ON SHEET 3.

STUD MATERIAL FOR CARBON STEEL CLAMPS SHALL BE SA-193-B7.
STUD MATERIAL FOR STAINLESS STEEL CLAMPS SHALL BE SA-193-B8 FOR MATERIAL CODE C. MATERIAL CODE D SHALL HAVE STUD MATERIAL IN COMPLIANCE WITH THE DIMENSIONAL AND TOLERANCE SPECIFICATIONS OF SA-193 AND MATERIAL SPECIFICATION PER SB-574 ALLOY N10276.

NUT MATERIAL FOR CARBON STEEL CLAMPS SHALL BE SA-194-GR2 OR 2H.
NUT MATERIAL FOR STAINLESS STEEL CLAMPS SHALL BE SA-194-GR8.

TEMPERATURE RANGE: SEE MATERIAL SPECIFICATION.

NOTES:

1. ALL MATERIALS ARE PER ASTM SPECIFICATIONS
2. ALL DIMENSIONS ARE IN INCHES.
3. TOLERANCE: SEE KC161.
4. FOR DESIGN FEATURE PURPOSES, THIS DRAWING TAKES PRECEDENCE OVER PROCUREMENT DOCUMENTS REFERENCED HEREIN.
5. REFERENCED DOCUMENTS SHALL BE OF THE ISSUE IN EFFECT ON THE DATE OF INVITATION FOR BID.
6. PASSIVATE STAINLESS STEEL CLAMPS PER QQ-P-35 TYPE VI OR VII.
7. HUB SIZES 1/2GR4/5, 3/4GR4/5, AND 1GR11 ARE NOT TO BE USED FOR NEW DESIGN.
8. MATERIAL CODES B AND C FOR 5" CLAMP SIZE ARE SA351-CF8 (4 BOLT)(#48003).
9. SA-182-F316 CLAMPS ARE NON-STOCK SPECIAL ORDER ITEMS AND SHALL NOT BE USED FOR NEW DESIGN.
10. 1-1½" CLAMP SIZE (-2) IS NOT INTERCHANGEABLE WITH 1" CLAMP SIZE (-8).
11. MATERIAL CODE B FOR 1" CLAMP SIZE IS SA-351-CA15. MATERIAL CODE C FOR 1" CLAMP SIZE IS SA-351-CF8M.
12. MATERIAL CODE C HAS STUDS PER SA-193-B6 AND SHOULD ONLY BE USED IN ENVIRONMENTS NOT SUBJECT TO EXTREME CORROSION.
13. MATERIAL CODE D HAS STUDS PER SB-574 ALLOY N10276 AND SHOULD ONLY BE USED IN ENVIRONMENTS SUBJECT TO EXTREME ACIDIC CORROSION.
14. A CLAMP ASSEMBLY SHALL CONSIST OF 2 CLAMP HALVES, 4 STUDS, AND 8 NUTS. EXCEPT 2PC. 2 BOLT CLAMP ASSEMBLIES SHALL HAVE 2 STUDS AND 4 NUTS.
15. DO NOT USE THIS STANDARD FOR ITEMS WHICH CANNOT BE IDENTIFIED BY THE LIMITATIONS CONTAINED HEREIN.
16. ALL PARTS NOT MANUFACTURED BY GRAY TOOL CO. MUST BE CERTIFIED BY THE MANUFACTURER TO BE INTERCHANGEABLE WITH THE GRAY TOOL PART NUMBER.

EXAMPLE OF PART NOS. BASIC PART NUMBER KC155-3A
- MATERIAL CODE
- DASH NUMBER

APPROVED SOURCE: COMMERCIAL PARTS CAN BE PURCHASED FROM: VETCO-GRAY INC. 10777 NW FWY PO BOX 2291 HOUSTON, TX 77252-2291.

ALTERNATE SOURCES:

OTECO EQUIPMENT COMPANY
2811 TROUT STREET
P.O. BOX 1849
HOUSTON, TX 77251-1849

REFLANGE, INC.
5730 CENTRALCREST
HOUSTON, TX 77092

REVISED: (F) CHANGED APPROVED SOURCE. 10-2-92

APPROVED: 9-19-67

CUSTODIAN: JOHN F. KENNEDY SPACE CENTER		
PROCUREMENT SPEC. NONE	CLAMP ASSEMBLY	STANDARD PART
COORDINATION STATUS		KC155
KSC DE		SHEET 2 OF 3

KSC FORM 32-85 (CG 4/92)

NOTICE: WHEN GOVERNMENT DRAWINGS, SPECIFICATIONS OR OTHER DATA ARE USED FOR ANY PURPOSE OTHER THAN IN CONNECTION WITH A DEFINITELY RELATED GOVERNMENT PROCUREMENT OPERATION, THE UNITED STATES GOVERNMENT THEREBY INCURS NO RESPONSIBILITY NOR ANY OBLIGATION WHATSOEVER AND THE FACT THAT THE GOVERNMENT MAY HAVE FORMULATED, FURNISHED, OR IN ANY WAY SUPPLIED THE SAID DRAWINGS, SPECIFICATIONS, OR OTHER DATA IS NOT REGARDED BY IMPLICATION OR OTHERWISE AS IN ANY MANNER LICENSING THE HOLDER OR ANY OTHER PERSON OR CORPORATION, OR CONVEYING ANY RIGHTS OR PERMISSION TO MANUFACTURE, USE, OR SELL ANY PATENTED INVENTION THAT MAY IN ANY WAY BE RELATED THERETO.

DASH NO.	HUB SIZE	CLAMP SIZE	DIMENSIONS A	B	C	D	E	F	G	J	K	M	N	-A SA-266 CL. III NORM. GRAYLOC STK NO.	-B SA-182 F316 [2] GRAYLOC STK NO.	-C SA-182 F304 [12] GRAYLOC STK NO.	-D SA-182 F304 [13] GRAYLOC STK NO.
1 [7]	1/2GR4	1/2-3/4	1.188	2.625	2.812	3.625	1.000	2.125	2.250	.375	3.000	1.000	---	50019	---	48500	48500
	1/2GR5																
	3/4GR4																
	3/4GR5																
2 [7] [10]	1GR11	1-1½	2.687	5.000	4.500	6.500	2.000	3.250	4.000	.625	5.000	3.125	1.625	49500	49533	48501 [1]	48501 [1]
	1-1/2GR14																
3	2GR14	2	3.187	5.750	5.062	7.500	2.000	3.625	4.500	.750	5.250	3.500	1.812	49501	49534	48502	48502
	2GR20																
4	2-1/2GR20	2½-3	4.375	7.500	6.875	9.250	2.375	4.500	5.250	.750	6.000	3.500	1.812	49502	49535	48503	48503
	2-1/2GR25																
	3GR25																
	3GR27																
5	4GR31	4	5.375	8.500	8.125	10.500	2.375	5.250	6.000	.875	7.000	4.062	2.062	49503	49536	48504	48504
	4GR34																
	4GR40																
6	5GR52	5	6.875	10.250	9.750	12.375	3.000	6.125	7.375	1.000	8.000	4.438	2.313	50214	48003 [8]	48003 [8]	48003 [8]
	5GR46																
	5GR40																
7	6GR52	6	8.375	12.625	12.000	15.000	3.500	6.625	8.750	1.125	9.375	4.812	2.437	49508	49537	48506	48506
	6GR62																
8	1GR4	1	1.687	3.187	2.813	4.250	1.375	2.250	2.625	.500	3.500	2.313	1.250	49760 [1]	---	49761 [1]	49761 [1]
	1GR5																
	1GR7																
	1GR11																

APPROVED: 9-19-67

REVISED: (F) CHANGED APPROVED VENDOR ON SHEET 2. 10-2-92

FED SUP CLASS 4730

CUSTODIAN: JOHN F. KENNEDY SPACE CENTER

PROCUREMENT SPEC. NONE

COORDINATION STATUS KSC DE

CLAMP ASSEMBLY

KC155

STANDARD PART

SHEET 3 OF 3

KSC FORM 32-85 (CG 4/92)

NOTICE: WHEN GOVERNMENT DRAWINGS, SPECIFICATIONS OR OTHER DATA ARE USED FOR ANY PURPOSE OTHER THAN IN CONNECTION WITH A DEFINITELY RELATED GOVERNMENT PROCUREMENT OPERATION; THE UNITED STATES GOVERNMENT THEREBY INCURS NO RESPONSIBILITY NOR ANY OBLIGATION WHATSOEVER AND THE FACT THAT THE GOVERNMENT MAY HAVE FORMULATED, FURNISHED, OR IN ANY WAY SUPPLIED THE SAID DRAWINGS, SPECIFICATIONS, OR OTHER DATA IS NOT REGARDED BY IMPLICATION OR OTHERWISE AS IN ANY MANNER LICENSING THE HOLDER OR ANY OTHER PERSON OR CORPORATION, OR CONVEYING ANY RIGHTS OR PERMISSION TO MANUFACTURE, USE, OR SELL ANY PATENTED INVENTION THAT MAY IN ANY WAY BE RELATED THERETO.

FED SUP CLASS
4730

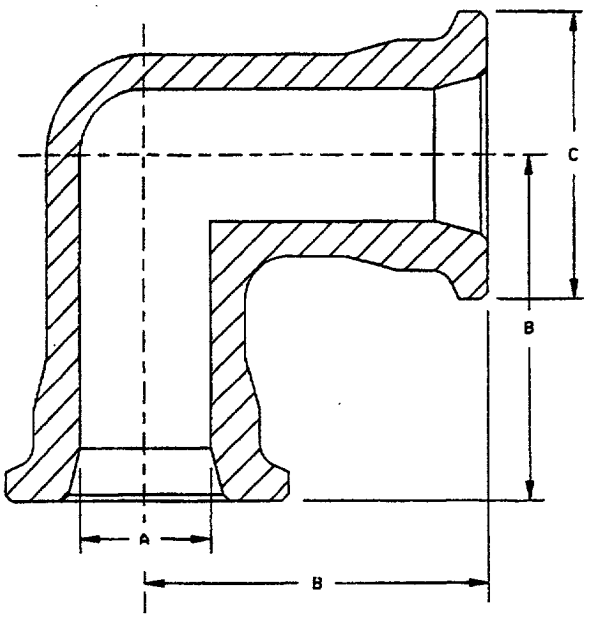

MATERIAL CODE: SEE SHEET 2.

TEMPERATURE RANGE: SEE MATERIAL SPECIFICATION.

NOTES:

1. ALL MATERIALS ARE PER ASTM SPECIFICATIONS
2. ALL DIMENSIONS ARE IN INCHES.
3. TOLERANCE: SEE KC161.
4. FOR DESIGN FEATURE PURPOSES, THIS DRAWING TAKES PRECEDENCE OVER PROCUREMENT DOCUMENTS REFERENCED HEREIN.
5. REFERENCED DOCUMENTS SHALL BE OF THE ISSUE IN EFFECT ON THE DATE OF INVITATION FOR BID.
6. DASH NUMBERS 1 TO 5 ARE NOT TO BE USED FOR NEW DESIGN. SEE DASH NUMBERS 21 TO 24.
7. DO NOT USE THIS STANDARD FOR ITEMS WHICH CANNOT BE IDENTIFIED BY THE LIMITATIONS CONTAINED HEREIN.
8. ALL PARTS NOT MANUFACTURED BY GRAY TOOL CO. MUST BE CERTIFIED BY THE MANUFACTURER TO BE INTERCHANGEABLE WITH THE GRAY TOOL PART NUMBER.

EXAMPLE OF PART NOS. BASIC PART NUMBER KC156-3A
- MATERIAL CODE
- DASH NUMBER

APPROVED SOURCE: COMMERCIAL PARTS CAN BE PURCHASED FROM: VETCO-GRAY INC. 10777 NW FWY PO BOX 2291 HOUSTON, TX 77252-2291

ALTERNATE SOURCES:

OTECO EQUIPMENT COMPANY
2811 TROUT STREET
P.O. BOX 1849
HOUSTON, TX 77251-1849

REFLANGE, INC.
5730 CENTRALCREST
HOUSTON, TX 77092

APPROVED: 9-19-67 REVISED: (E) CHANGED APPROVED SOURCE. 10-2-92

CUSTODIAN: JOHN F. KENNEDY SPACE CENTER		
PROCUREMENT SPEC. NONE	ELBOW, 90° PIPE HUB	STANDARD PART
COORDINATION STATUS KSC DE		KC156
		SHEET 1 OF 2

KSC FORM 32-85 (CG 4/92)

FED SUP CLASS
4730

DASH NO.	PIPE SIZE	HUB SIZE	DIMENSIONS A	DIMENSIONS B ±1/32	DIMENSIONS C	-A SA-105 GR11 GRAYLOC STK NO.	-B SA-182 F-316SS GRAYLOC STK NO.	
1	½	½-¾GR5	.625	2.000	1.562	54105	54152	FORGED
2	½	½-¾GR4	.500	2.000	1.562	54102	54149	FORGED
3	¾	¾GR5	.625	2.000	1.562	54105	54152	FORGED
4	¾	¾GR4	.500	2.000	1.562	54102	54149	FORGED
5	1	1-1¼-1½GR11	1.125	4.000	3.125	54106	54153	FORGED
6	1½	1¼-1½GR14	1.610	4.000	3.125	54107	54156	FORGED
7	2	2GR20	2.063	4.000	3.625	54117	54129	FORGED
8	2	2GR14	1.610	4.000	3.625	54114	54162	FORGED
9	2½	2½GR25	2.672	5.375	5.000	54119	54145	FORGED
10	2½	2½GR20	2.063	5.375	5.000	54118	54163	FORGED
11	3	3GR27	3.063	5.375	5.000	54122	54146	FORGED
12	3	3GR25	2.672	5.375	5.000	54119	54145	FORGED
13	4	4GR40	4.063	6.000	6.000	54125	54174	CAST
14	4	4GR34	3.688	6.000	6.000	54126	54172	CAST
15	4	4GR31	3.250	6.000	6.000	54127	54168	CAST
16	5	5GR52	5.313	8.000	7.500	54144	54213	CAST
17	5	5GR46	4.750	8.000	7.500	54382	54391	CAST
18	5	5GR40	4.063	8.000	7.500	54123	54147	CAST
19	6	6GR62	6.065	9.000	9.250	54130	54182	CAST
20	6	6GR52	5.313	9.000	9.250	54131	54181	CAST
						-A SA-148 GR90/60	-B SA-351 CF8M	
21	½,¾	1GR4	.500	3.000	2.000	54798	54804	FORGED
22	½,¾,1	1GR5	.625	3.000	2.000	54799	54805	FORGED
23	¾,1	1GR7	.906	3.000	2.000	54800	54414	FORGED
24	1	1GR11	1.125	3.000	2.000	54801	54807	FORGED
						-A SA-105 GR11	-B SA-182 F-316SS	

REVISED: (E) CHANGED APPROVED VENDOR ON SHEET 1. 10-2-92

APPROVED: 9-19-67

CUSTODIAN: JOHN F. KENNEDY SPACE CENTER

PROCUREMENT SPEC.
NONE

COORDINATION STATUS
KSC DE

ELBOW, 90° PIPE HUB

STANDARD PART

KC156

SHEET 2 OF 2

KSC FORM 32-85 (CG 4/92)

NOTICE: WHEN GOVERNMENT DRAWINGS, SPECIFICATIONS OR OTHER DATA ARE USED FOR ANY PURPOSE OTHER THAN IN CONNECTION WITH A DEFINITELY RELATED GOVERNMENT PROCUREMENT OPERATION, THE UNITED STATES GOVERNMENT THEREBY INCURS NO RESPONSIBILITY NOR ANY OBLIGATION WHATSOEVER AND THE FACT THAT THE GOVERNMENT MAY HAVE FORMULATED, FURNISHED, OR IN ANY WAY SUPPLIED THE SAID DRAWINGS, SPECIFICATIONS, OR OTHER DATA IS NOT REGARDED BY IMPLICATION OR OTHERWISE AS IN ANY MANNER LICENSING THE HOLDER OR ANY OTHER PERSON OR CORPORATION, OR CONVEYING ANY RIGHTS OR PERMISSION TO MANUFACTURE, USE, OR SELL ANY PATENTED INVENTION THAT MAY IN ANY WAY BE RELATED THERETO.

NOTICE: WHEN GOVERNMENT DRAWINGS, SPECIFICATIONS OR OTHER DATA ARE USED FOR ANY PURPOSE OTHER THAN IN CONNECTION WITH A DEFINITELY RELATED GOVERNMENT PROCUREMENT OPERATION, THE UNITED STATES GOVERNMENT THEREBY INCURS NO RESPONSIBILITY NOR ANY OBLIGATION WHATSOEVER AND THE FACT THAT THE GOVERNMENT MAY HAVE FORMULATED, FURNISHED, OR IN ANY WAY SUPPLIED THE SAID DRAWINGS, SPECIFICATIONS, OR OTHER DATA IS NOT REGARDED BY IMPLICATION OR OTHERWISE AS IN ANY MANNER LICENSING THE HOLDER OR ANY OTHER PERSON OR CORPORATION, OR CONVEYING ANY RIGHTS OR PERMISSION TO MANUFACTURE, USE, OR SELL ANY PATENTED INVENTION THAT MAY IN ANY WAY BE RELATED THERETO.

FED SUP CLASS
4730

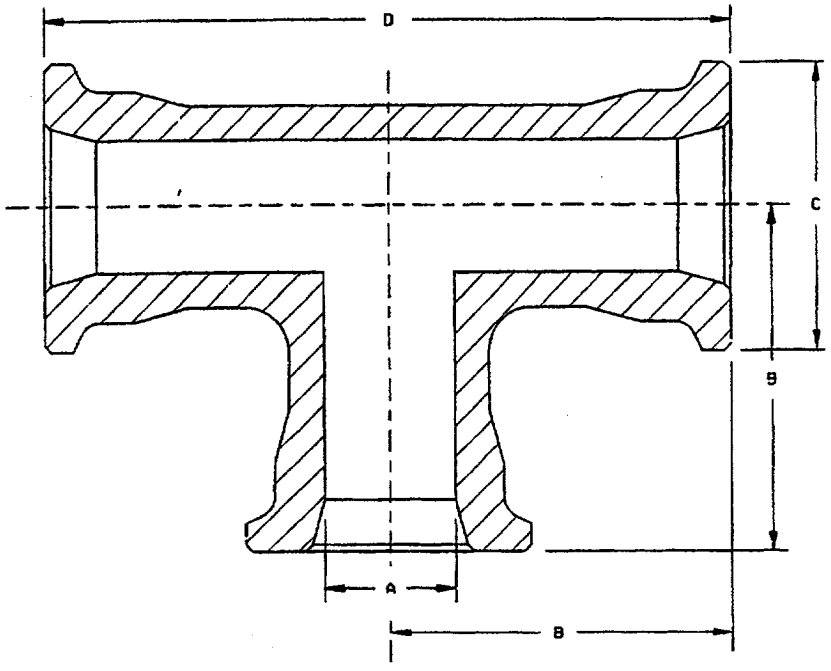

MATERIAL CODE: SEE SHEET 2.

TEMPERATURE RANGE: SEE MATERIAL SPECIFICATION.

NOTES:

1. ALL MATERIALS ARE PER ASTM SPECIFICATIONS
2. ALL DIMENSIONS ARE IN INCHES.
3. TOLERANCE: SEE KC161.
4. FOR DESIGN FEATURE PURPOSES, THIS DRAWING TAKES PRECEDENCE OVER PROCUREMENT DOCUMENTS REFERENCED HEREIN.
5. REFERENCED DOCUMENTS SHALL BE OF THE ISSUE IN EFFECT ON THE DATE OF INVITATION FOR BID.
6. DASH NUMBERS 1 TO 5 ARE NOT TO BE USED FOR NEW DESIGN. SEE DASH NUMBERS 21 TO 24.
7. DO NOT USE THIS STANDARD FOR ITEMS WHICH CANNOT BE IDENTIFIED BY THE LIMITATIONS CONTAINED HEREIN.
8. ALL PARTS NOT MANUFACTURED BY GRAY TOOL CO. MUST BE CERTIFIED BY THE MANUFACTURER TO BE INTERCHANGEABLE WITH THE GRAY TOOL PART NUMBER.

EXAMPLE OF PART NOS. BASIC PART NUMBER KC157-3A
- MATERIAL CODE
- DASH NUMBER

APPROVED SOURCE: COMMERCIAL PARTS CAN BE PURCHASED FROM: VETCO-GRAY INC. 10777 NW FWY PO BOX 2291 HOUSTON, TX 77252-2291

ALTERNATE SOURCES:
OTECO EQUIPMENT COMPANY
2811 TROUT STREET
P.O. BOX 1849
HOUSTON, TX 77251-1849

REFLANGE, INC.
5730 CENTRALCREST
HOUSTON, TX 77092

REVISED: (E) CHANGED APPROVED SOURCE. 10-2-92

APPROVED: 9-19-67

CUSTODIAN: JOHN F. KENNEDY SPACE CENTER		
PROCUREMENT SPEC. NONE	TEE, PIPE HUB	STANDARD PART
		KC157
COORDINATION STATUS KSC DE		SHEET 1 OF 2

KSC FORM 32-85 (CG 4/92)

FED SUP CLASS
4730

DASH NO.	PIPE SIZE	HUB SIZE	DIMENSIONS A	B ±1/32	C	D ±1/16	-A SA-105 GR11 GRAYLOC STK NO.	-B SA-182 F-316SS GRAYLOC STK NO.	
1	½	½-¾GR5	.625	2.000	1.562	4.000	54167	54239	FORGED
2	½	½-¾GR4	.500	2.000	1.562	4.000	54164	54238	
3	¾	¾GR5	.625	2.000	1.562	4.000	54167	54239	
4	¾	¾GR4	.500	2.000	1.562	4.000	54164	54238	
5	1	1-1¼-1½GR11	1.125	4.000	3.125	8.000	54169	54241	
6	1½	1¼-1½GR14	1.610	4.000	3.125	8.000	54173	54242	
7	2	2GR20	2.063	4.000	3.625	8.000	54179	54244	
8	2	2GR14	1.610	4.000	3.625	8.000	54178	54243	
9	2½	2½GR25	2.672	5.375	5.000	10.750	54196	54246	
10	2½	2½GR20	2.063	5.375	5.000	10.750	54180	54245	
11	3	3GR27	3.063	5.375	5.000	10.750	54197	54247	
12	3	3GR25	2.672	5.375	5.000	10.750	54196	54246	
13	4	4GR40	4.063	6.000	6.000	12.000	54358	54352	
14	4	4GR34	3.688	6.000	6.000	12.000	54357	54316	
15	4	4GR31	3.250	6.000	6.000	12.000	54356	54354	
16	5	5GR52	5.313	8.000	7.500	16.000	54232	54373	CAST
17	5	5GR46	4.750	8.000	7.500	16.000	54363	54372	
18	5	5GR40	4.063	8.000	7.500	16.000	54228	54233	
19	6	6GR62	6.065	9.000	9.250	18.000	54206	54254	
20	6	6GR52	5.313	9.000	9.250	18.000	54203	54253	
							-A SA-148 GR90/60	-B SA-351 CF8M	
21	½,¾	1GR4	.500	3.000	2.000	6.000	54791	54795	FORGED
22	½,¾,1	1GR5	.625	3.000	2.000	6.000	54792	54796	
23	¾,1	1GR7	.906	3.000	2.000	6.000	54793	54412	
24	1	1GR11	1.125	3.000	2.000	6.000	54794	54797	
							-A SA-105 GR11	-B SA-182 F-316SS	

REVISED: (E) CHANGED APPROVED SOURCE ON SHEET 1. 10-2-92

APPROVED: 9-19-67

CUSTODIAN: JOHN F. KENNEDY SPACE CENTER

PROCUREMENT SPEC.
NONE

COORDINATION STATUS
KSC DE

TEE, PIPE HUB

STANDARD PART
KC157
SHEET 2 OF 2

KSC FORM 32-85 (CG 4/92)

NOTICE: WHEN GOVERNMENT DRAWINGS, SPECIFICATIONS OR OTHER DATA ARE USED FOR ANY PURPOSE OTHER THAN IN CONNECTION WITH A DEFINITELY RELATED GOVERNMENT PROCUREMENT OPERATION, THE UNITED STATES GOVERNMENT THEREBY INCURS NO RESPONSIBILITY NOR ANY OBLIGATION WHATSOEVER AND THE FACT THAT THE GOVERNMENT MAY HAVE FORMULATED, FURNISHED, OR IN ANY WAY SUPPLIED THE SAID DRAWINGS, SPECIFICATIONS, OR OTHER DATA IS NOT REGARDED BY IMPLICATION OR OTHERWISE AS IN ANY MANNER LICENSING THE HOLDER OR ANY OTHER PERSON OR CORPORATION, OR CONVEYING ANY RIGHTS OR PERMISSION TO MANUFACTURE, USE, OR SELL ANY PATENTED INVENTION THAT MAY IN ANY WAY BE RELATED THERETO.

NOTICE: WHEN GOVERNMENT DRAWINGS, SPECIFICATIONS OR OTHER DATA ARE USED FOR ANY PURPOSE OTHER THAN IN CONNECTION WITH A DEFINITELY RELATED GOVERNMENT PROCUREMENT OPERATION, THE UNITED STATES GOVERNMENT THEREBY INCURS NO RESPONSIBILITY NOR ANY OBLIGATION WHATSOEVER AND THE FACT THAT THE GOVERNMENT MAY HAVE FORMULATED, FURNISHED, OR IN ANY WAY SUPPLIED THE SAID DRAWINGS, SPECIFICATIONS, OR OTHER DATA IS NOT REGARDED BY IMPLICATION OR OTHERWISE AS IN ANY MANNER LICENSING THE HOLDER OR ANY OTHER PERSON OR CORPORATION, OR CONVEYING ANY RIGHTS OR PERMISSION TO MANUFACTURE, USE, OR SELL ANY PATENTED INVENTION THAT MAY IN ANY WAY BE RELATED THERETO.

FED SUP CLASS
4730

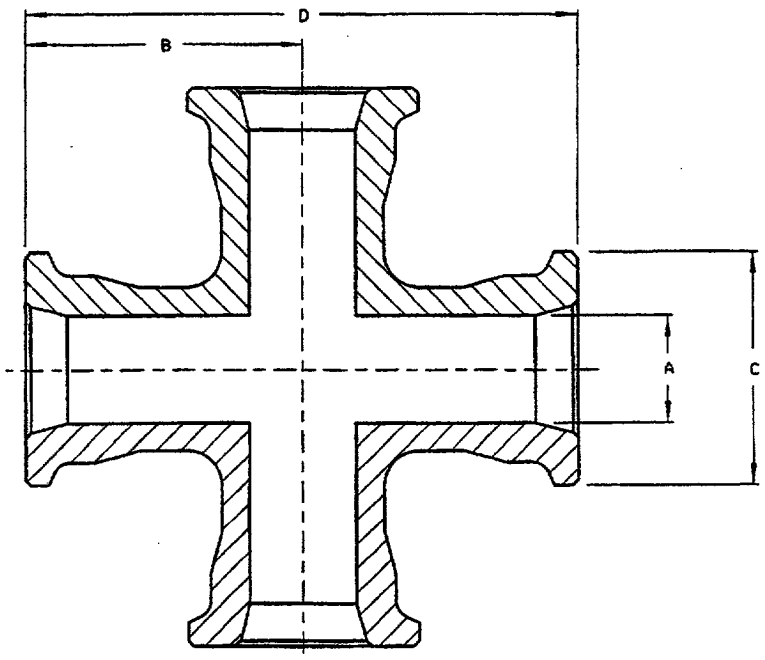

MATERIAL CODE: SEE SHEET 2.

TEMPERATURE RANGE: SEE MATERIAL SPECIFICATION.

NOTES:

1. ALL MATERIALS ARE PER ASTM SPECIFICATIONS
2. ALL DIMENSIONS ARE IN INCHES.
3. TOLERANCE: SEE KC161.
4. FOR DESIGN FEATURE PURPOSES, THIS DRAWING TAKES PRECEDENCE OVER PROCUREMENT DOCUMENTS REFERENCED HEREIN.
5. REFERENCED DOCUMENTS SHALL BE OF THE ISSUE IN EFFECT ON THE DATE OF INVITATION FOR BID.
6. DASH NUMBERS 1 TO 5 ARE NOT TO BE USED FOR NEW DESIGN. SEE DASH NUMBERS 21 TO 24.
7. DO NOT USE THIS STANDARD FOR ITEMS WHICH CANNOT BE IDENTIFIED BY THE LIMITATIONS CONTAINED HEREIN.
8. ALL PARTS NOT MANUFACTURED BY GRAY TOOL CO. MUST BE CERTIFIED BY THE MANUFACTURER TO BE INTERCHANGEABLE WITH THE GRAY TOOL PART NUMBER.

EXAMPLE OF PART NOS. BASIC PART NUMBER KC157-3A
- MATERIAL CODE
- DASH NUMBER

APPROVED SOURCE: COMMERCIAL PARTS CAN BE PURCHASED FROM: VETCO-GRAY INC. 10777 NW FWY PO BOX 2291 HOUSTON, TX 77252-2291

ALTERNATE SOURCES:
OTECO EQUIPMENT COMPANY
2811 TROUT STREET
P.O. BOX 1849
HOUSTON, TX 77251-1849

REFLANGE, INC.
5730 CENTRALCREST
HOUSTON, TX 77092

REVISED: (E) CHANGED APPROVED SOURCE. 10-2-92

APPROVED: 9-19-67

CUSTODIAN: JOHN F. KENNEDY SPACE CENTER

PROCUREMENT SPEC.
NONE

COORDINATION STATUS
KSC DE

CROSS, PIPE HUB

STANDARD PART
KC158 6

SHEET 1 OF 2

KSC FORM 32-85 (CG 4/92)

FED SUP CLASS 4730

DASH NO.	PIPE SIZE	HUB SIZE	DIMENSIONS A	B ±1/32	C	D ±1/16	-A SA-105 GR11 GRAYLOC STK NO.	-B SA-182 F-316SS GRAYLOC STK NO.	
1	½	½-¾GR5	.625	2.000	1.562	4.000	54212	54262	FORGED
2	½	½-¾GR4	.500	2.000	1.562	4.000	54207	54257	
3	¾	¾GR5	.625	2.000	1.562	4.000	54212	54262	
4	¾	¾GR4	.500	2.000	1.562	4.000	54207	54257	
5	1	1-1¼-1½GR11	1.125	4.000	3.125	8.000	54208	54263	CAST
6	1½	1¼-1½GR14	1.610	4.000	3.125	8.000	54209	54264	
7	2	2GR20	2.063	4.000	3.625	8.000	54210	54268	
8	2	2GR14	1.610	4.000	3.625	8.000	54211	54267	
9	2½	2½GR25	2.672	5.375	5.000	10.750	54221	54272	
10	2½	2½GR20	2.063	5.375	5.000	10.750	54216	54269	
11	3	3GR27	3.063	5.375	5.000	10.750	54220	54273	
12	3	3GR25	2.672	5.375	5.000	10.750	54221	54272	
13	4	4GR40	4.063	6.000	6.000	12.000	54225	54279	
14	4	4GR34	3.688	6.000	6.000	12.000	54226	54278	
15	4	4GR31	3.250	6.000	6.000	12.000	54227	54274	
16	5	5GR52	5.313	8.000	7.500	16.000	54219	54307	
17	5	5GR46	4.750	8.000	7.500	16.000	---	---	
18	5	5GR40	4.063	8.000	7.500	16.000	54214	54222	
19	6	6GR62	6.065	9.000	9.250	18.000	54230	54283	
20	6	6GR52	5.313	9.000	9.250	18.000	54231	54282	
							-A SA-148 GR90/60	-B SA-351 CF8M	FORGED

APPROVED: 9-19-67 REVISED: (E) CHANGED APPROVED SOURCE ON SHEET 1. 10-2-92

CUSTODIAN: JOHN F. KENNEDY SPACE CENTER

PROCUREMENT SPEC. NONE

COORDINATION STATUS KSC DE

TEE, PIPE HUB

STANDARD PART

KC158 B

SHEET 2 OF 2

KSC FORM 32-85 (CG 4/92)

NOTICE: WHEN GOVERNMENT DRAWINGS, SPECIFICATIONS OR OTHER DATA ARE USED FOR ANY PURPOSE OTHER THAN IN CONNECTION WITH A DEFINITELY RELATED GOVERNMENT PROCUREMENT OPERATION, THE UNITED STATES GOVERNMENT THEREBY INCURS NO RESPONSIBILITY NOR ANY OBLIGATION WHATSOEVER AND THE FACT THAT THE GOVERNMENT MAY HAVE FORMULATED, FURNISHED, OR IN ANY WAY SUPPLIED THE SAID DRAWINGS, SPECIFICATIONS, OR OTHER DATA IS NOT REGARDED BY IMPLICATION OR OTHERWISE AS IN ANY MANNER LICENSING THE HOLDER OR ANY OTHER PERSON OR CORPORATION, OR CONVEYING ANY RIGHTS OR PERMISSION TO MANUFACTURE, USE, OR SELL ANY PATENTED INVENTION THAT MAY IN ANY WAY BE RELATED THERETO.

FED SUP CLASS
4730

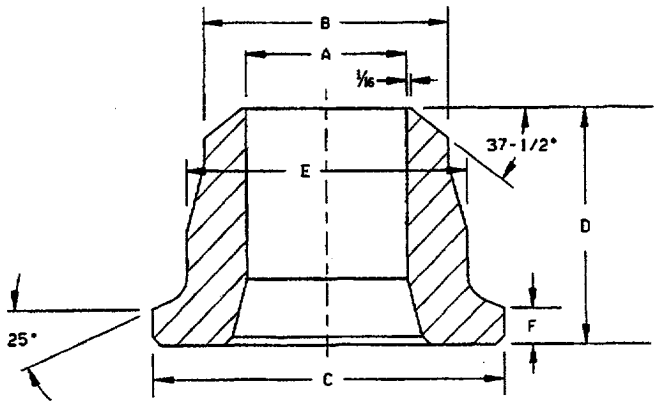

MATERIAL CODE:
ADD A AFTER DASH NO. TO DENOTE SA-105-GR11.
ADD B AFTER DASH NO. TO DENOTE SA-182-F316L.
ADD D AFTER DASH NO. TO DENOTE SA-182-F316.

SCHEDULE CODE:
ADD J AFTER MATERIAL CODE TO DENOTE SCHEDULE 40.
ADD K AFTER MATERIAL CODE TO DENOTE SCHEDULE 80.
ADD L AFTER MATERIAL CODE TO DENOTE SCHEDULE 160.
ADD M AFTER MATERIAL CODE TO DENOTE SCHEDULE XXS.

TEMPERATURE RANGE: SEE MATERIAL SPECIFICATION.

NOTES:

1. ALL MATERIALS ARE PER ASTM SPECIFICATIONS
2. ALL DIMENSIONS ARE IN INCHES.
3. TOLERANCE: SEE KC161.
4. FOR DESIGN FEATURE PURPOSES, THIS DRAWING TAKES PRECEDENCE OVER PROCUREMENT DOCUMENTS REFERENCED HEREIN.
5. REFERENCED DOCUMENTS SHALL BE OF THE ISSUE IN EFFECT ON THE DATE OF INVITATION FOR BID.
6. DASH NUMBERS 1 TO 4 ARE NOT TO BE USED FOR NEW DESIGN. SEE DASH NUMBERS 13 TO 15.
7. KC DASH NO. 1A ANS 2A MAY BE SA-107-61T GRADE 1030 INSTEAD OF SA-105-GR11.
8. DO NOT USE THIS STANDARD FOR ITEMS WHICH CANNOT BE IDENTIFIED BY THE LIMITATIONS CONTAINED HEREIN.
9. ALL PARTS NOT MANUFACTURED BY GRAY TOOL CO. MUST BE CERTIFIED BY THE MANUFACTURER TO BE INTERCHANGEABLE WITH THE GRAY TOOL PART NUMBER.

EXAMPLE OF PART NOS.
BASIC PART NUMBER KC159-3AJ
- SCHEDULE CODE
- MATERIAL CODE
- DASH NUMBER

APPROVED SOURCE:
COMMERCIAL PARTS CAN BE PURCHASED FROM: VETCO-GRAY INC. 10777 NW FWY
PO BOX 2291
HOUSTON,TX 77252-2291

ALTERNATE SOURCES:
OTECO EQUIPMENT COMPANY
2811 TROUT STREET
P.O. BOX 1849
HOUSTON, TX 77251-1849

REFLANGE, INC.
5730 CENTRALCREST
HOUSTON, TX 77092

APPROVED: 9-19-67
REVISED: (E) CHANGED APPROVED SOURCE. 10-2-92

CUSTODIAN: JOHN F. KENNEDY SPACE CENTER

PROCUREMENT SPEC. NONE	HUB, BUTTWELD	STANDARD PART
COORDINATION STATUS KSC DE		KC159
		SHEET 1 OF 3

KSC FORM 32-85 (CG 4/92)

NOTICE: WHEN GOVERNMENT DRAWINGS, SPECIFICATIONS OR OTHER DATA ARE USED FOR ANY PURPOSE OTHER THAN IN CONNECTION WITH A DEFINITELY RELATED GOVERNMENT PROCUREMENT OPERATION, THE UNITED STATES GOVERNMENT THEREBY INCURS NO RESPONSIBILITY NOR ANY OBLIGATION WHATSOEVER AND THE FACT THAT THE GOVERNMENT MAY HAVE FORMULATED, FURNISHED, OR IN ANY WAY SUPPLIED THE SAID DRAWINGS, SPECIFICATIONS, OR OTHER DATA IS NOT REGARDED BY IMPLICATION OR OTHERWISE AS IN ANY MANNER LICENSING THE HOLDER OR ANY OTHER PERSON OR CORPORATION, OR CONVEYING ANY RIGHTS OR PERMISSION TO MANUFACTURE, USE, OR SELL ANY PATENTED INVENTION THAT MAY IN ANY WAY BE RELATED THERETO.

FED SUP CLASS 4730

DASH NO.	PIPE SIZE	ANSI/ASME B36.10 SCHEDULE	HUB SIZE	DIMENSIONS A	B	C	D	E	F	-A SA-105 GRII GRAYLOC STK NO.	-B SA-182 F-316L GRAYLOC STK NO.	-D SA-182 F-316 GRAYLOC STK NO.
1	½	40	1/2GR5	.622	.840	1.562	1.500	1.063	.133	52076	52666	52796
		80		.546						52077	52667	52797
		160	1/2GR4	.466						52078	52668	52798
6		XXS		.252						52079	52669	52800
2	¾	160	3/4GR5	.614	1.050	1.562	1.500	1.063	.133	52083	52673	52803
6		XXS	3/4GR4	.434						52084	52674	52804
3	1	40	1GR11	1.049	1.315	3.125	2.375	2.375	.500	52108	52700	52805
		80		.957						52109	52701	52806
		160		.815						52110	52702	52807
6		XXS		.599						52111	52703	52808
4	1-1/4	40	1-1/4GR14	1.380	1.660	3.125	2.375	2.375	.437	52126	52705	52809
		80		1.278						52099	52706	52810
		160		1.160						52127	52707	52811
6		XXS	1-1/4GR11	.896					.500	52094	52708	52812
5	1-1/2	40	1-1/2GR14	1.610	1.900	3.125	2.375	2.375	.437	52100	52710	52813
		80		1.500						52101	52711	52814
		160		1.337						52102	52712	52815
		XXS		1.100						52103	52713	52816
6	2	40	2GR20	2.067	2.375	3.625	2.750	2.875	.437	52104	52721	52821
		80		1.939						52105	52722	52822
		160		1.689						52115	52723	52823
		XXS	2GR14	1.503						52113	52724	52824
7	2-1/2	40	2-1/2GR25	2.469	2.875	5.000	3.250	4.000	.500	52215	52730	52825
		80		2.323						52216	52731	52826
		160	2-1/2GR20	2.125						52218	52732	52827
		XXS		1.771						52219	52733	52828
8	3	40	3GR27	3.068	3.500	5.000	3.250	4.000	.500	52204	52740	52844
		80		2.900						52205	52741	52845
		160	3GR25	2.624						52226	52742	52846
		XXS		2.300						52227	52743	52847
9	3-1/2	40	4GR34	3.548	4.000	6.000	3.625	5.000	.500	52240		52838
		80		3.364						52241		52839
		XXS	4GR31	2.728						52243		52841

APPROVED: 9-19-67 REVISED: (E) CHANGED APPROVED SOURCE ON SHEET 1. 10-2-92

CUSTODIAN: JOHN F. KENNEDY SPACE CENTER

PROCUREMENT SPEC. NONE

COORDINATION STATUS KSC DE

HUB, BUTTWELD

STANDARD PART

KC159

SHEET 2 OF 3

KSC FORM 32-85 (CG 4/92)

NOTICE: WHEN GOVERNMENT DRAWINGS, SPECIFICATIONS OR OTHER DATA ARE USED FOR ANY PURPOSE OTHER THAN IN CONNECTION WITH A DEFINITELY RELATED GOVERNMENT PROCUREMENT OPERATION, THE UNITED STATES GOVERNMENT THEREBY INCURS NO RESPONSIBILITY NOR ANY OBLIGATION WHATSOEVER AND THE FACT THAT THE GOVERNMENT MAY HAVE FORMULATED, FURNISHED, OR IN ANY WAY SUPPLIED THE SAID DRAWINGS, SPECIFICATIONS, OR OTHER DATA IS NOT REGARDED BY IMPLICATION OR OTHERWISE AS IN ANY MANNER LICENSING THE HOLDER OR ANY OTHER PERSON OR CORPORATION, OR CONVEYING ANY RIGHTS OR PERMISSION TO MANUFACTURE, USE, OR SELL ANY PATENTED INVENTION THAT MAY IN ANY WAY BE RELATED THERETO.

FED SUP CLASS
4730

DASH NO.	PIPE SIZE	ANSI/ASME B36.10 SCHEDULE	HUB SIZE	DIMENSIONS A	B	C	D	E	F	-A SA-105 GR11 GRAYLOC STK NO.	-B SA-182 F-316L GRAYLOC STK NO.	-D SA-182 F-316 GRAYLOC STK NO.
10	4	40	4GR40	4.026	4.500	6.000	3.625	5.000	.500	52302	52750	52851
		80		3.826						52303	52751	52852
		160	4GR34	3.438						52311	52752	52853
		XXS	4GR31	3.152						52314	52753	52854
11	5	40	5GR52	5.047	5.563	7.500	4.375	6.500	.625	52380		52867
		80		4.813						52381		52868
		160	5GR46	4.313						52385		52871
		XXS	5GR40	4.063						52383		52870
12	6	40	6GR62	6.065	6.625	9.250	4.625	7.750	.750	52400	52763	52874
		80		5.761						52401	52764	52875
		160	6GR52	5.189					.812	52413	52765	52876
		XXS		4.897						52414	52766	52877
13	½	40	1GR5	.622	.840	2.000	1.750	1.500	.313	52192		55955
		80		.546						52193		53439
		160	1GR4	.466						52194		53686
		XXS		.252						52195		53437
14	¾	40	1GR7	.824	1.050	2.000	1.750	1.500	.313	52196		53440
		80		.742						52233		53218
		160	1GR5	.614						52198		53442
		XXS	1GR4	.434						52199		53447
15	1	40	1GR11	1.049	1.315	2.000	1.750	1.500	.313	53225		53231
		80		.957						53226		53232
		160	1GR7	.815						53227		53233
		XXS	1GR5	.599						53228		53234

REVISED: (E) CHANGED APPROVED SOURCE ON SHEET 1. 10-2-92

APPROVED: 9-19-67

CUSTODIAN: JOHN F. KENNEDY SPACE CENTER

PROCUREMENT SPEC.
NONE

COORDINATION STATUS
KSC DE

HUB, BUTTWELD

STANDARD PART
KC159

SHEET 3 OF 3

KSC FORM 32-85 (CG 4/92)

NOTICE: WHEN GOVERNMENT DRAWINGS, SPECIFICATIONS OR OTHER DATA ARE USED FOR ANY PURPOSE OTHER THAN IN CONNECTION WITH A DEFINITELY RELATED GOVERNMENT PROCUREMENT OPERATION, THE UNITED STATES GOVERNMENT THEREBY INCURS NO RESPONSIBILITY NOR ANY OBLIGATION WHATSOEVER AND THE FACT THAT THE GOVERNMENT MAY HAVE FORMULATED, FURNISHED, OR IN ANY WAY SUPPLIED THE SAID DRAWINGS, SPECIFICATIONS, OR OTHER DATA IS NOT REGARDED BY IMPLICATION OR OTHERWISE AS IN ANY MANNER LICENSING THE HOLDER OR ANY OTHER PERSON OR CORPORATION, OR CONVEYING ANY RIGHTS OR PERMISSION TO MANUFACTURE, USE, OR SELL ANY PATENTED INVENTION THAT MAY IN ANY WAY BE RELATED THERETO.

FED SUP CLASS
4730

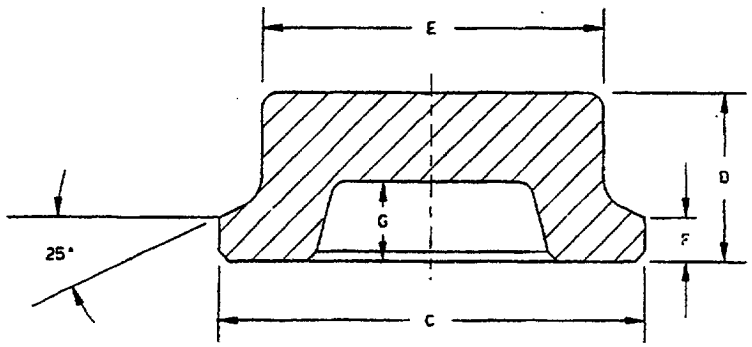

MATERIAL CODE: SEE SHEET 2.

TEMPERATURE RANGE: SEE MATERIAL SPECIFICATION.

NOTES:

1. ALL MATERIALS ARE PER ASTM SPECIFICATIONS
2. ALL DIMENSIONS ARE IN INCHES.
3. TOLERANCE: SEE KC161.
4. FOR DESIGN FEATURE PURPOSES, THIS DRAWING TAKES PRECEDENCE OVER PROCUREMENT DOCUMENTS REFERENCED HEREIN.
5. REFERENCED DOCUMENTS SHALL BE OF THE ISSUE IN EFFECT ON THE DATE OF INVITATION FOR BID.
6. DASH NUMBERS 1 TO 3 ARE NOT TO BE USED FOR NEW DESIGN. SEE DASH NUMBERS 18 TO 21.
7. DO NOT USE THIS STANDARD FOR ITEMS WHICH CANNOT BE IDENTIFIED BY THE LIMITATIONS CONTAINED HEREIN.
8. ALL PARTS NOT MANUFACTURED BY GRAY TOOL CO. MUST BE CERTIFIED BY THE MANUFACTURER TO BE INTERCHANGEABLE WITH THE GRAY TOOL PART NUMBER.

EXAMPLE OF PART NOS. BASIC PART NUMBER KC160-3A

- MATERIAL CODE
- DASH NUMBER

APPROVED SOURCE: COMMERCIAL PARTS CAN BE PURCHASED FROM: VETCO-GRAY INC. 10777 NW FWY P.O. BOX 2291, HOUSTON, TX 77001-2291.

ALTERNATE SOURCES:

OTECO EQUIPMENT COMPANY
2811 TROUT STREET
P.O. BOX 1849
HOUSTON, TX 77251-1849

REFLANGE, INC.
5730 CENTRALCREST
HOUSTON, TX 77092

APPROVED: 9-19-67 REVISED: (E) CHANGED APPROVED SOURCE. 10-2-92

CUSTODIAN: JOHN F. KENNEDY SPACE CENTER

PROCUREMENT SPEC. NONE	HUB, BLIND PIPE	STANDARD PART
COORDINATION STATUS		KC160
KSC DE		SHEET 1 OF 2

KSC FORM 32-85 (CG 4/92)

NOTICE: WHEN GOVERNMENT DRAWINGS, SPECIFICATIONS OR OTHER DATA ARE USED FOR ANY PURPOSE OTHER THAN IN CONNECTION WITH A DEFINITELY RELATED GOVERNMENT PROCUREMENT OPERATION, THE UNITED STATES GOVERNMENT THEREBY INCURS NO RESPONSIBILITY NOR ANY OBLIGATION WHATSOEVER AND THE FACT THAT THE GOVERNMENT MAY HAVE FORMULATED, FURNISHED, OR IN ANY WAY SUPPLIED THE SAID DRAWINGS, SPECIFICATIONS, OR OTHER DATA IS NOT REGARDED BY IMPLICATION OR OTHERWISE AS IN ANY MANNER LICENSING THE HOLDER OR ANY OTHER PERSON OR CORPORATION, OR CONVEYING ANY RIGHTS OR PERMISSION TO MANUFACTURE, USE, OR SELL ANY PATENTED INVENTION THAT MAY IN ANY WAY BE RELATED THERETO.

FED SUP CLASS
4730

DASH NO.	HUB SIZE	DIMENSIONS C	D	E	F	G	-A SA-105* GRII GRAYLOC STK NO.	-B SA-182 F-316SS GRAYLOC STK NO.
1	½-¾GR4	1.562	1.250	1.063	.133	.438	59045	59378
2	½-¾GR5	1.562	1.250	1.063	.133	.438	59047	59380
3	1-1¼-1½GR11	3.125	2.125	2.375	.500	.562	59050	59300
4	1¼-1½GR14	3.125	2.125	2.375	.437	.688	59000	59305
5	2GR14	3.625	2.250	2.875	.437	.688	59053	59310
6	2GR20	3.625	2.250	2.875	.437	.688	59002	59315
7	2½GR20	5.000	2.500	4.000	.500	.688	59022	59320
8	2½GR25	5.000	2.500	4.000	.500	.688	59020	59325
9	3GR27	5.000	2.500	4.000	.500	.938	59006	59330
10	4GR31	6.000	2.375	5.000	.500	.938	59024	59345
11	4GR34	6.000	2.375	5.000	.500	1.062	59060	59340
12	4GR40	6.000	2.125	5.000	.500	1.000	59010	59335
13	5GR52	7.500	2.875	6.500	.625	1.000	58992	59354
14	5GR46	7.500	2.875	6.500	.625	1.000	59148	59279
15	5GR40	7.500	3.500	6.500	.625	1.000	58990	59347
16	6GR52	9.250	3.500	7.750	.812	1.000	59064	59350
17	6GR62	9.250	2.875	7.750	.750	1.000	59014	59349
18	1GR4	2.000	1.750	1.500	.313	.438	58955	59497
19	1GR5	2.000	1.750	1.500	.313	.438	58922	59525
20	1GR7	2.000	1.750	1.500	.313	.563	58915	59523
20	1GR11	2.000	1.750	1.500	.313	.563	59592	59524

* ½" AND ¾" SIZES MAY BE FURNISHED FROM SA-107-GR 1030 UNLESS OTHERWISE SPECIFIED.

REVISED: (E) CHANGED APPROVED SOURCE ON SHEET 1. 10-2-92

APPROVED: 9-19-67

CUSTODIAN: JOHN F. KENNEDY SPACE CENTER

PROCUREMENT SPEC.
NONE

COORDINATION STATUS
KSC DE

HUB, BLIND PIPE

STANDARD PART
KC160

SHEET 2 OF 2

KSC FORM 32-85 (CG 4/92)

NOTICE: WHEN GOVERNMENT DRAWINGS, SPECIFICATIONS OR OTHER DATA ARE USED FOR ANY PURPOSE OTHER THAN IN CONNECTION WITH A DEFINITELY RELATED GOVERNMENT PROCUREMENT OPERATION, THE UNITED STATES GOVERNMENT THEREBY INCURS NO RESPONSIBILITY NOR ANY OBLIGATION WHATSOEVER AND THE FACT THAT THE GOVERNMENT MAY HAVE FORMULATED, FURNISHED, OR IN ANY WAY SUPPLIED THE SAID DRAWINGS, SPECIFICATIONS, OR OTHER DATA IS NOT REGARDED BY IMPLICATION OR OTHERWISE AS IN ANY MANNER LICENSING THE HOLDER OR ANY OTHER PERSON OR CORPORATION, OR CONVEYING ANY RIGHTS OR PERMISSION TO MANUFACTURE, USE, OR SELL ANY PATENTED INVENTION THAT MAY IN ANY WAY BE RELATED THERETO.

FED SUP CLASS
NONE

GRAYLOC CLAMPS

DIMENSION	SIZE	TOLERANCE
A	½" THRU 3" 4" THRU 6"	±.031 ±.063
B	½" THRU 6"	±.063
C	FOR REFERENCE ONLY	
D	1" THRU 3" 4" THRU 6"	±.250 ±.375
E	½" THRU 3" 4" THRU 6"	±.250 ±.375
F,G,J,K	FOR REFERENCE ONLY	
M	½" THRU 3" 4" THRU 6"	±.250 ±.375
N	½" THRU 6"	±.031

GRAYLOC HUBS

DIMENSION	SIZE	TOLERANCE
A	½" THRU 3" 4" THRU 6"	±.031 ±.063
B	½" THRU 5" 6"	+.094-.031 +.156-.031
C	½" THRU 6"	±.063
D	BUTTWELD ½" THRU 6" BLIND ½" THRU 5" BLIND 6"	±.063 +.063 +.125
E	½" THRU 6"	±.063
F	½" THRU 6"	±.031
G	½" THRU 6"	+.125 -.063
25° CLAMPING SURFACE ON HUB	½" THRU 6"	±1°
BUTTWELD BEVEL IN ACCORDANCE WITH ANSI B16.25		

NOTE: TOLERANCE ON ANGLES, WHERE APPLICABLE SHALL BE ±1°.

GRAYLOC SEAL RINGS

DIMENSION	SIZE	TOLERANCE
A	4 THRU 34 40 THRU 62	±.031 ±.063
C	4 THRU 34 40 THRU 62	±.031 ±.125
D	FOR REFERENCE ONLY	
E	4 THRU 62	±.016
F	4 THRU 34 40 THRU 62	+.031-.000 +.063-.000

GRAYLOC FITTINGS

DIMENSION	SIZE	TOLERANCE
A	½" THRU 3" 4" THRU 6"	±.031 ±.063
B	½" THRU 6"	±.031
C	½" THRU 6"	±.063
D	½" THRU 6"	±.063

APPROVED: 1-6-69 REVISED: (B) REV & REDRAWN 8-1-90

CUSTODIAN: JOHN F. KENNEDY SPACE CENTER

PROCUREMENT SPEC.
NONE

COORDINATION STATUS
KSC DE

DIMENSION TOLERANCES FOR HUB STYLE FLANGE FITTINGS

DESIGN STANDARD
KC161

SHEET 1 OF 1

KSC FORM 32-85 (CG 4/92)

NOTICE: WHEN GOVERNMENT DRAWINGS, SPECIFICATIONS OR OTHER DATA ARE USED FOR ANY PURPOSE OTHER THAN IN CONNECTION WITH A DEFINITELY RELATED GOVERNMENT PROCUREMENT OPERATION, THE UNITED STATES GOVERNMENT THEREBY INCURS NO RESPONSIBILITY NOR ANY OBLIGATION WHATSOEVER AND THE FACT THAT THE GOVERNMENT MAY HAVE FORMULATED, FURNISHED, OR IN ANY WAY SUPPLIED THE SAID DRAWINGS, SPECIFICATIONS, OR OTHER DATA IS NOT REGARDED BY IMPLICATION OR OTHERWISE AS IN ANY MANNER LICENSING THE HOLDER OR ANY OTHER PERSON OR CORPORATION, OR CONVEYING ANY RIGHTS OR PERMISSION TO MANUFACTURE, USE, OR SELL ANY PATENTED INVENTION THAT MAY IN ANY WAY BE RELATED THERETO.

FED SUP CLASS
4730

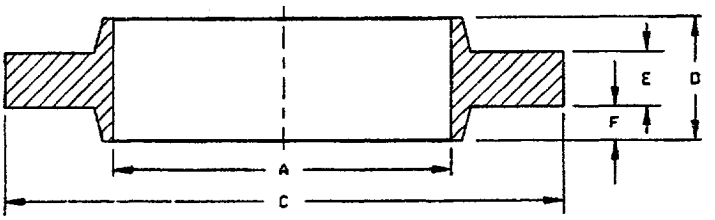

MATERIAL CODE: ADD A AFTER DASH NO. TO DENOTE AISI 1018 THRU 1030 TEFLON COATED.
ADD B AFTER DASH NO. TO DENOTE TYPE 316 SS SILVER PLATED. DO NOT SPECIFY FOR NEW DESIGN.
ADD D AFTER DASH NO. TO DENOTE AISI 630 TYPE 17-4PH, TEFLON COATED.

TEMPERATURE RANGE: PARTS MADE FROM AISI 1018-1030 ARE TEFLON COATED 0.001 TO 0.003 THICK FOR SERVICE TEMPERATURES OF -50°F TO +350°F.
PARTS MADE FROM 17-4PH, TEFLON COATED, ARE FOR SERVICE TEMPERATURES OF -452°F TO +450°F.

NOTES:

1. ALL MATERIALS ARE PER AISI SPECIFICATIONS
2. ALL DIMENSIONS ARE IN INCHES.
3. TOLERANCE: SEE KC161.
4. STOCK NUMBERS FOR UNCOATED RINGS OR FOR RINGS WITH DIFFERENT COATINGS THAN SPECIFIED BELOW WILL NOT CORRESPOND TO STOCK NUMBERS FOR STANDARD RINGS.
5. FOR DESIGN FEATURE PURPOSES, THIS DRAWING TAKES PRECEDENCE OVER PROCUREMENT DOCUMENTS REFERENCED HEREIN.
6. REFERENCED DOCUMENTS SHALL BE OF THE ISSUE IN EFFECT ON THE DATE OF INVITATION FOR BID.
7. DO NOT USE THIS STANDARD FOR ITEMS WHICH CANNOT BE IDENTIFIED BY THE LIMITATIONS CONTAINED HEREIN.
8. ALL PARTS NOT MANUFACTURED BY GRAY TOOL CO. MUST BE CERTIFIED BY THE MANUFACTURER TO BE INTERCHANGEABLE WITH THE GRAY TOOL PART NUMBER.

EXAMPLE OF PART NOS. BASIC PART NUMBER KC162-3A
- A — MATERIAL CODE
- 3 — DASH NUMBER

APPROVED SOURCE: COMMERCIAL PARTS CAN BE PURCHASED FROM: VETCO-GRAY INC. 10777 NW FWY P.O. BOX 2291, HOUSTON, TX 77001-2291.

ALTERNATE SOURCES:

OTECO EQUIPMENT COMPANY
2811 TROUT STREET
P.O. BOX 1849
HOUSTON, TX 77251-1849

REFLANGE, INC.
5730 CENTRALCREST
HOUSTON, TX 77092

APPROVED: 9-19-67 REVISED: (F) CHANGED APPROVED SOURCE. 10-2-92

CUSTODIAN: JOHN F. KENNEDY SPACE CENTER

PROCUREMENT SPEC. NONE	RING, PIPE HUB SEAL	STANDARD PART KC162
COORDINATION STATUS KSC DE		SHEET 1 OF 2

KSC FORM 32-85 (CG 4/92)

NOTICE: WHEN GOVERNMENT DRAWINGS, SPECIFICATIONS OR OTHER DATA ARE USED FOR ANY PURPOSE OTHER THAN IN CONNECTION WITH A DEFINITELY RELATED GOVERNMENT PROCUREMENT OPERATION, THE UNITED STATES GOVERNMENT THEREBY INCURS NO RESPONSIBILITY NOR ANY OBLIGATION WHATSOEVER AND THE FACT THAT THE GOVERNMENT MAY HAVE FORMULATED, FURNISHED, OR IN ANY WAY SUPPLIED THE SAID DRAWINGS, SPECIFICATIONS, OR OTHER DATA IS NOT REGARDED BY IMPLICATION OR OTHERWISE AS IN ANY MANNER LICENSING THE HOLDER OR ANY OTHER PERSON OR CORPORATION, OR CONVEYING ANY RIGHTS OR PERMISSION TO MANUFACTURE, USE, OR SELL ANY PATENTED INVENTION THAT MAY IN ANY WAY BE RELATED THERETO.

FED SUP CLASS
4730

DASH NO.	RING SIZE	DIMENSIONS A	C	D	E	F	MAT. CODE A GRAYLOC STK NO.	MAT. CODE B GRAYLOC STK NO.	MAT. CODE D GRAYLOC STK NO.
1	4	.500	1.000	.375	.125	.125	50554	50800	51230
2	5	.625	1.094	.375	.125	.125	50563	50801	51231
3	7	.906	1.375	.375	.125	.125	50701	50802	51232
4	11	1.125	1.734	.375	.125	.125	50551	50803	51233
5	13	1.500	2.375	.375	.125	.125	50698	50837	51234
6	14	1.610	2.625	.563	.250	.156	50553	50804	51235
7	20	2.063	3.250	.750	.250	.250	50557	50807	51236
8	25	2.672	4.000	.750	.250	.250	50570	50810	51237
9	27	3.063	4.250	.750	.250	.250	50622	50811	51238
10	31	3.250	4.500	.750	.250	.250	50561	50812	51239
11	34	3.688	5.000	.750	.250	.250	50562	50813	51240
12	40	4.063	5.500	1.000	.250	.375	66040	50814	51241
13	46	4.750	6.188	1.000	.250	.375	66041	66376	51245
14	52	5.313	6.625	1.000	.250	.375	50623	50815	51242
15	62	6.065	7.875	1.375	.375	.500	50566	50816	51243
16	23	2.375	3.500	.750	.250	.250	50569	66375	66175

REVISED: (E) CHANGED APPROVED SOURCE ON SHEET 1. 10-2-92

APPROVED: 9-19-67

CUSTODIAN: JOHN F. KENNEDY SPACE CENTER

PROCUREMENT SPEC.
NONE

COORDINATION STATUS
KSC DE

RING, PIPE HUB SEAL

STANDARD PART
KC162

SHEET 2 OF 2

KSC FORM 32-85 (CG 4/92)

NOTICE: WHEN GOVERNMENT DRAWINGS, SPECIFICATIONS OR OTHER DATA IS USED FOR ANY PURPOSE OTHER THAN IN CONNECTION WITH A DEFINITELY RELATED GOVERNMENT PROCUREMENT OPERATION, THE UNITED STATES GOVERNMENT THEREBY INCURS NO RESPONSIBILITY NOR ANY OBLIGATION WHATSOEVER AND THE FACT THAT THE GOVERNMENT MAY HAVE FORMULATED, FURNISHED, OR IN ANY WAY SUPPLIED THE SAID DRAWINGS, SPECIFICATIONS, OR OTHER DATA IS NOT REGARDED BY IMPLICATION OR OTHERWISE AS IN ANY MANNER LICENSING THE HOLDER OR ANY OTHER PERSON OR CORPORATION, OR CONVEYING ANY RIGHTS OR PERMISSION TO MANUFACTURE, USE, OR SELL ANY PATENTED INVENTION THAT MAY IN ANY WAY BE RELATED THERETO.

NOTICE: WHEN GOVERNMENT DRAWINGS, SPECIFICATIONS OR OTHER DATA ARE USED FOR ANY PURPOSE OTHER THAN IN CONNECTION WITH A DEFINITELY RELATED GOVERNMENT PROCUREMENT OPERATION; THE UNITED STATES GOVERNMENT THEREBY INCURS NO RESPONSIBILITY NOR ANY OBLIGATION WHATSOEVER AND THE FACT THAT THE GOVERNMENT MAY HAVE FORMULATED, FURNISHED, OR IN ANY WAY SUPPLIED THE SAID DRAWINGS, SPECIFICATIONS, OR OTHER DATA IS NOT REGARDED BY IMPLICATION OR OTHERWISE AS IN ANY MANNER LICENSING THE HOLDER OR ANY OTHER PERSON OR CORPORATION, OR CONVEYING ANY RIGHTS OR PERMISSION TO MANUFACTURE, USE, OR SELL ANY PATENTED INVENTION THAT MAY IN ANY WAY BE RELATED THERETO.

FED SUP CLASS
NONE

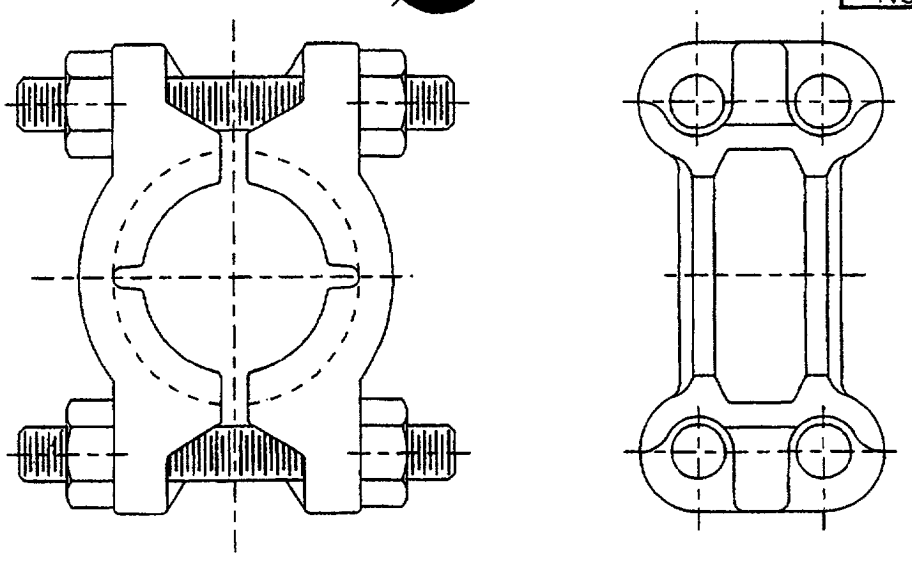

GENERAL NOTES:

1. A COMPLETE KC163 PIPE CONNECTION ASSEMBLY CONSISTS OF THE FOLLOWING COMPONENTS:
   (A) TWO KC HUBS OR A COMBINATION HUB AND FITTING.
   (B) ONE KC162 SEAL RING.
   (C) ONE KC155 CLAMP ASSEMBLY, 4 BOLT, OR 2 BOLT.
2. EXTREME CAUTION SHOULD BE EXERCISED TO PREVENT TIGHTENING OF THE STUD BOLTS WHILE THE ASSEMBLY IS UNDER PRESSURE OR MECHANICAL LOADS.
3. SPECIAL CARE SHOULD BE EXERCISED DURING ASSEMBLY OF THE CONNECTION SO THAT NO DAMAGE OCCURS TO THE SEALING SURFACES.
4. NO WELDING IS RECOMMENDED ON THE CLAMPS OR SEAL RINGS. THE SEAL SURFACE OF THE KC HUBS SHOULD BE PROTECTED DURING WELDING TO AVOID WELD SPLATTER ANS OTHER DAMAGE. DURING STRESS RELIEVING THE SEAL SURFACES OF THE CARBON STEEL HUBS SHOULD BE PROTECTED AGAINST SCALING WITH A HIGH TEMPERATURE GRAPHITE PASTE, SIMILAR TO KEY-PASTE.
5. THIS IS A DESIGN STANDARD AND SHALL NOT BE USED AS A PART NUMBER.
6. GRAYLOC SIZES 1/2GR4/5, 3/4GR4/5, 1GR11, 1-1/4GR14, AND 1-1/4GR11 ARE NOT TO BE USED FOR NEW DESIGN.

ASSEMBLY NOTES:

1. ALL PROTECTIVE COATINGS AND FOREIGN MATTER MUST BE CLEANED FROM ALL SEALING SURFACES BEFORE INSTALLATION.
2. KC CONNECTIONS SHALL BE MADE UP WITH NO LUBRICATION APPLIED TO HUBS, FITTINGS, SEAL RINGS OR CLAMPS. LUBRICATION SHALL BE APPLIED TO BOLTS ONLY. CARE SHALL BE TAKEN TO PREVENT LUBE FROM ENTERING CONNECTION.
3. THE HUBS SHOULD BE ALIGNED BEFORE ASSEMBLY TO THE EXTENT THAT THE CLAMP SEGMENTS CAN PULL THE MATING HUBS UNIFORMLY AGAINST THE RING RIB USING THE RECOMMENDED BOLT PRELOAD SHOWN IN TABLE I.
4. WHEN TIGHTENING, THE SPACING BETWEEN THE CLAMP EARS SHOULD BE APPROXIMATELY THE SAME.
5. TO PROPERLY PRELOAD THE KC CONNECTION AGAINST FLUID PRESSURE AND GASKET LOADS, THE FOLLOWING TORQUE VALUES ARE RECOMMENDED FOR THE VARIOUS SIZES OF STUDS AS LISTED IN TABLE I FOR APPROXIMATELY 20,000 PSI TENSILE STRESS IN THE STUDS.
6. THE TORQUE VALUES LISTED IN TABLE I ARE FOR WELL LUBRICATED STUDS ONLY.

APPROVED: 9-14-67 REVISED: © REV & REDRAWN 8-1-90

CUSTODIAN:	JOHN F. KENNEDY SPACE CENTER	
PROCUREMENT SPEC. NONE	PIPE CONNECTION ASSY INSTALLATION OF	DESIGN STANDARD KC163
COORDINATION STATUS KSC DE		SHEET 1 OF 3

KSC FORM 32-85 (CG 4/92)

FED SUP CLASS
NONE

PIPE SIZE (IN.)	SCHEDULE	HUB SIZE	KC159 BUTTWELD HUB	KC160 BLIND HUB	KC162 SEAL RING	KC156 ELBOW	KC157 TEE	KC158 CROSS	KC155 CLAMP
½	40	1/2GR5	-1	-2	-2	-1	-1	-1	-1
	80								
	160	1/2GR4		-1	-1	-2	-2	-2	
	XXS								
¾	160	3/4GR5	-2	-2	-2	-3	-3	-3	-1
	XXS	3/4GR4		-1	-1	-4	-4	-4	
1	ALL	1GR11	-3	-3	-4	-5	-5	-5	-2
½	40	1GR5	-13	-19	-2	-22	-22	---	-8
	80								
	160	1GR4		-18	-1	-21	-21	---	
	XXS								
¾	40	1GR7	-14	-20	-3	-23	-23	---	-8
	80								
	160	1GR5		-19	-2	-22	-22	---	
	XXS	1GR4		-18	-1	-21	-21	---	
1	40	1GR11	-15	-21	-4	-24	-24	---	-8
	80								
	160	1GR7		-20	-3	-23	-23	---	
	XXS	1GR5		-19	-2	-22	-22	---	
1¼	40	1-1/4GR14	-4	-4	-6	-6	-6	-6	-2
	80								
	160			-3	-4	-5	-5	-5	
	XXS	1-1/4GR11							
1½	ALL	1-1/2GR14	-5	-4	-6	-6	-6	-6	-2
2	40	2GR20	-6	-6	-7	-7	-7	-7	-3
	80								
	160			-5	-6	-8	-8	-8	
	XXS	2GR14							
2½	40	2-1/2GR25	-7	-8	-8	-9	-9	-9	-4
	80								
	160	2-1/2GR20		-7	-7	-10	-10	-10	
	XXS								
3	40	3GR27	-8	-9	-9	-11	-11	-11	-4
	80								
	160	3GR25		-8	-8	-12	-12	-12	
	XXS								

REVISED: (C) REV & REDRAWN 8-1-90

APPROVED: 9-14-67

NOTICE: WHEN GOVERNMENT DRAWINGS, SPECIFICATIONS OR OTHER DATA ARE USED FOR ANY PURPOSE OTHER THAN IN CONNECTION WITH A DEFINITELY RELATED GOVERNMENT PROCUREMENT OPERATION, THE UNITED STATES GOVERNMENT THEREBY INCURS NO RESPONSIBILITY NOR ANY OBLIGATION WHATSOEVER AND THE FACT THAT THE GOVERNMENT MAY HAVE FORMULATED, FURNISHED, OR IN ANY WAY SUPPLIED THE SAID DRAWINGS, SPECIFICATIONS, OR OTHER DATA IS NOT REGARDED BY IMPLICATION OR OTHERWISE AS IN ANY MANNER LICENSING THE HOLDER OR ANY OTHER PERSON OR CORPORATION, OR CONVEYING ANY RIGHTS OR PERMISSION TO MANUFACTURE, USE, OR SELL ANY PATENTED INVENTION THAT MAY IN ANY WAY BE RELATED THERETO.

CUSTODIAN: JOHN F. KENNEDY SPACE CENTER

PROCUREMENT SPEC.
NONE

COORDINATION STATUS
KSC DE

PIPE CONNECTION ASSY
INSTALLATION OF

DESIGN STANDARD
KC163

SHEET 2 OF 3

KSC FORM 32-85 (CG 4/92)

FED SUP CLASS
NONE

PIPE SIZE (IN.)	SCHEDULE	HUB SIZE	KC159 BUTTWELD HUB	KC160 BLIND HUB	KC162 SEAL RING	KC156 ELBOW	KC157 TEE	KC158 CROSS	KC155 CLAMP
3½	40	4GR34	-9	-11	-11	-14	-14	-14	-5
	80								
	XXS	4GR31		-10	-10	-15	-15	-15	
4	40	4GR40	-10	-12	-12	-13	-13	-13	-5
	80								
	160	4GR34		-11	-11	-14	-14	-14	
	XXS	4GR31		-10	-10	-15	-15	-15	
5	40	5GR52	-11	-13	-14	-16	-16	-16	-6
	80								
	160	5GR46		-14	-13	-17	-17	-17	
	XXS	5GR40		-15	-12	-18	-18	-18	
6	40	6GR62	-12	-17	-15	-19	-19	-19	-7
	80								
	160	6GR52		-16	-14	-20	-20	-20	
	XXS								

TABLE I

KC155 CLAMP ASSEMBLY, 4 BOLT

TORQUE REQUIREMENTS	
STUD SIZE	TORQUE RANGE (FT LBS)
½	15-20
⅝	30-40
¾	50-65
⅞	80-105
1	120-165
1⅛	180-235

TABLE II

KC155 CLAMP ASSEMBLY, 2 BOLT

TORQUE REQUIREMENTS	
STUD SIZE	TORQUE RANGE (FT LBS)
⅜	6-8

ABOVE VALUES ARE FOR LUBRICATED STUDS

REVISED: © REV & REDRAWN 8-1-90

APPROVED: 9-14-67

CUSTODIAN: JOHN F. KENNEDY SPACE CENTER

PROCUREMENT SPEC.
NONE

COORDINATION STATUS
KSC DE

PIPE CONNECTION ASSY
INSTALLATION OF

DESIGN STANDARD
KC163

SHEET 3 OF 3

KSC FORM 32-85 (CG 4/92)

NOTICE: WHEN GOVERNMENT DRAWINGS, SPECIFICATIONS OR OTHER DATA ARE USED FOR ANY PURPOSE OTHER THAN IN CONNECTION WITH A DEFINITELY RELATED GOVERNMENT PROCUREMENT OPERATION, THE UNITED STATES GOVERNMENT THEREBY INCURS NO RESPONSIBILITY NOR ANY OBLIGATION WHATSOEVER AND THE FACT THAT THE GOVERNMENT MAY HAVE FORMULATED, FURNISHED, OR IN ANY WAY SUPPLIED THE SAID DRAWINGS, SPECIFICATIONS, OR OTHER DATA IS NOT REGARDED BY IMPLICATION OR OTHERWISE AS IN ANY MANNER LICENSING THE HOLDER OR ANY OTHER PERSON OR CORPORATION, OR CONVEYING ANY RIGHTS OR PERMISSION TO MANUFACTURE, USE, OR SELL ANY PATENTED INVENTION THAT MAY IN ANY WAY BE RELATED THERETO.

FED SUP CLASS 4730

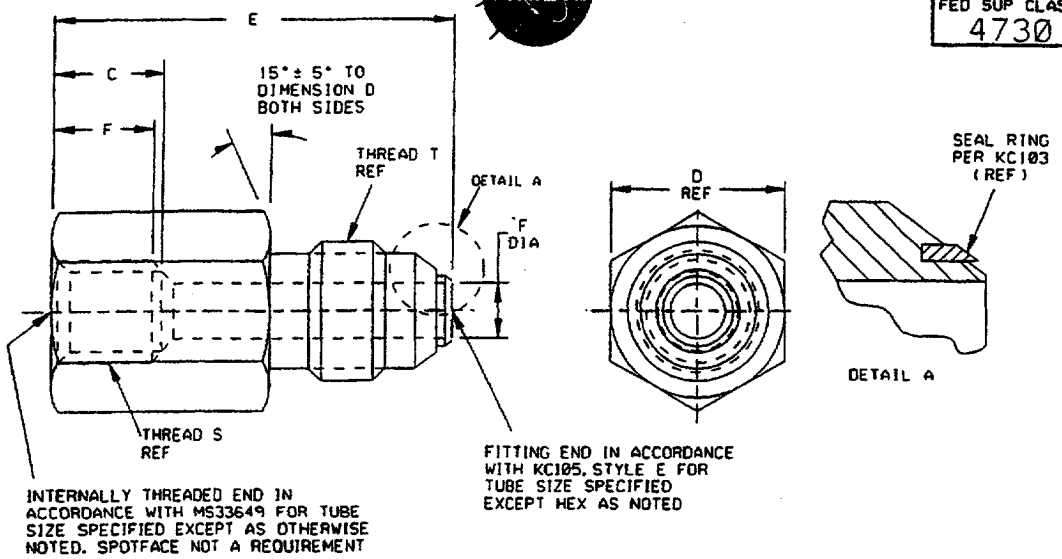

DASH NO.		INTERNALLY THREADED END				EXTERNALLY THREADED END		D HEX		E +.000 -.032	F DIA	
CRES STEEL	AL ALLOY	TUBE OD	THREAD S REF	C ±.016	F DIA 6	TUBE OD	THREAD T REF					
K4-8	D4-8	¼	7/16-20	.609	.493	½	3/4-16	1.000	+.003 -.004	1.016	.172	+.003 -.004
K6-12	D6-12	⅜	9/16-18		.482	¾	1-1/16-12	1.375		1.266	.297	±.004
K8-12	D8-12	½	3/4-16	.734	.593					1.641	.391	
K8-16	D8-16				.593	1	1-5/16-12	1.625	±.016	1.688		
K12-16	D12-16	¾	1-1/16-12	.922	.656					1.922	.609	±.005

MATERIAL: SEE PROCUREMENT SPECIFICATION.
ALUMINUM ALLOY, 2024-T6, CODE "D"
CORROSION RESISTANT STEEL (CLASS 316), CODE "K"

FINISH: SEE PROCUREMENT SPECIFICATION.

SCREW THREAD: SEE PROCUREMENT SPECIFICATION.

NOTES:
1. REMOVE BURRS AND SLIVERS. BREAK SHARP EDGES UNLESS OTHERWISE NOTED.
2. DIMENSIONS IN INCHES. UNLESS OTHERWISE SPECIFIED, TOLERANCE DECIMALS ±.016.
3. FOR DESIGN FEATURE PURPOSES, THIS DRAWING TAKES PRECEDENCE OVER PROCUREMENT DOCUMENTS REFERENCED HEREIN.
4. REFERENCED DOCUMENTS SHALL BE OF THE ISSUE IN EFFECT ON THE DATE OF INVITATION FOR BID.
5. MARKING OF FITTINGS SHALL BE CONSISTENT WITH PROCUREMENT SPECIFICATION USING APPLICABLE KC STANDARD AND PART NUMBER DESIGNATIONS AS SHOWN ON THIS DRAWING.

6 F MIN IS THE FULL THREAD DEPTH REQUIREMENTS

EXAMPLE OF PART NOS.
KC164K4-8 = BUSHING; ¼" TUBING, FOR INTERNAL THREADS, AND ½" TUBING, FOR EXTERNAL THREADS; CORROSION RESISTANT STEEL
KC164D6-12 = BUSHING; ⅜" TUBING, FOR INTERNAL THREADS, AND ¾" TUBING, FOR EXTERNAL THREADS; ALUMINUM ALLOY

APPROVED: 4-12-66 REVISED: (D) 8-1-90 (E) DASH NUMBER CHANGE 1-2-91 (F) ADDED DIM. F & NOTE 6 9-1-97

CUSTODIAN: JOHN F. KENNEDY SPACE CENTER

PROCUREMENT SPEC. KSC-F-124	BUSHING - SCREW THREAD REDUCER FOR SEAL RING	STANDARD PART KC164
COORDINATION STATUS KSC DE		SHEET 1 OF 1

NOTICE: WHEN GOVERNMENT DRAWINGS, SPECIFICATIONS OR OTHER DATA ARE USED FOR ANY PURPOSE OTHER THAN IN CONNECTION WITH A DEFINITELY RELATED GOVERNMENT PROCUREMENT OPERATION, THE UNITED STATES GOVERNMENT THEREBY INCURS NO RESPONSIBILITY NOR ANY OBLIGATION WHATSOEVER AND THE FACT THAT THE GOVERNMENT MAY HAVE FORMULATED, FURNISHED, OR IN ANY WAY SUPPLIED THE SAID DRAWINGS, SPECIFICATIONS, OR OTHER DATA IS NOT REGARDED BY IMPLICATION OR OTHERWISE AS IN ANY MANNER LICENSING THE HOLDER OR ANY OTHER PERSON OR CORPORATION, OR CONVEYING ANY RIGHTS OR PERMISSION TO MANUFACTURE, USE, OR SELL ANY PATENTED INVENTION THAT MAY IN ANY WAY BE RELATED THERETO.

NOTICE: WHEN GOVERNMENT DRAWINGS, SPECIFICATIONS OR OTHER DATA ARE USED FOR ANY PURPOSE OTHER THAN IN CONNECTION WITH A DEFINITELY RELATED GOVERNMENT PROCUREMENT OPERATION, THE UNITED STATES GOVERNMENT THEREBY INCURS NO RESPONSIBILITY NOR ANY OBLIGATION WHATSOEVER AND THE FACT THAT THE GOVERNMENT MAY HAVE FORMULATED, FURNISHED, OR IN ANY WAY SUPPLIED THE SAID DRAWINGS, SPECIFICATIONS, OR OTHER DATA IS NOT REGARDED BY IMPLICATION OR OTHERWISE AS IN ANY MANNER LICENSING THE HOLDER OR ANY OTHER PERSON OR CORPORATION, OR CONVEYING ANY RIGHTS OR PERMISSION TO MANUFACTURE, USE, OR SELL ANY PATENTED INVENTION THAT MAY IN ANY WAY BE RELATED THERETO.

FED SUP CLASS
NONE

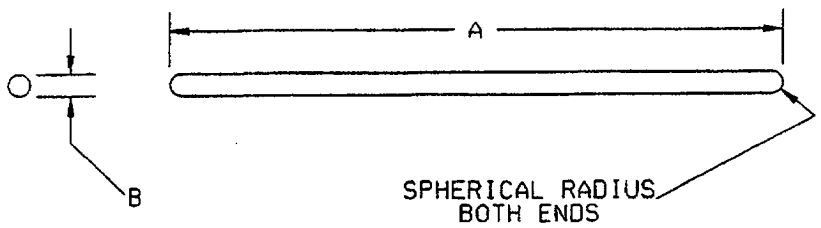

DASH NO.	TUBE OD REF	A DIM ±.016	B DIA (STOCK TOLERANCES)
-4	¼	1.094	.080
-6	⅜	1.453	
-8	½	2.000	.091
-10	⅝	2.326	
-12	¾	2.859	.125
-16	1	3.750	
-20	1¼	4.750	
-24	1½	5.500	
-28	1¾	6.750	
-32	2	7.500	

MATERIAL: CORROSION RESISTANT STEEL WIRE, TYPE 302, 304, OR 305 PER ASTM A580 ANNEALED

FINISH: NONE

CODE: NONE

NOTES:
1. DIMENSIONS ARE IN INCHES. UNLESS OTHERWISE SPECIFIED, TOLERANCE DECIMALS ±.016.
2. FOR DESIGN FEATURE PURPOSES, THIS DRAWING TAKES PRECEDENCE OVER PROCUREMENT DOCUMENTS SPECIFIED HEREIN.
3. REFERENCE DOCUMENTS SHALL BE OF THE ISSUE IN EFFECT ON DATE OF INVITATION FOR BID.

EXAMPLE OF PART NUMBER: KC165-4 = RETAINING WIRE FOR ¼" OD TUBE SWIVEL FITTING.

REVISED: (E) REV & REDRAWN 8-1-90

APPROVED: 12-1-75

CUSTODIAN: JOHN F. KENNEDY SPACE CENTER

PROCUREMENT SPEC.
NONE

COORDINATION STATUS
KSC DE

WIRE, RETAINING
SWIVEL NUT

STANDARD PART
KC165

SHEET 1 OF 1

FED SUP CLASS
4730

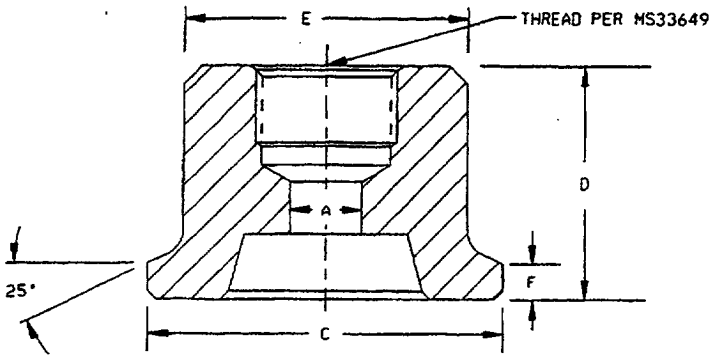

MATERIAL CODE: ADD A AFTER DASH NO. TO DENOTE SA-105-GR11.
ADD B AFTER DASH NO. TO DENOTE SA-182-F316.

TEMPERATURE RANGE: SEE MATERIAL SPECIFICATION.

NOTES:

1. ALL MATERIALS ARE PER ASTM SPECIFICATIONS
2. ALL DIMENSIONS ARE IN INCHES.
3. TOLERANCE: SEE KC161.
4. FOR DESIGN FEATURE PURPOSES, THIS DRAWING TAKES PRECEDENCE OVER PROCUREMENT DOCUMENTS REFERENCED HEREIN.
5. REFERENCED DOCUMENTS SHALL BE OF THE ISSUE IN EFFECT ON THE DATE OF INVITATION FOR BID.
6. HUB PRESSURE RATING IS THE LOWER OF EITHER THE VENDOR'S PRESSURE LIMIT ON THE HUB OR KSC'S PRESSURE LIMIT ON THE FITTING WHICH SCREWS INTO THE THREADED HOLE.
7. THIS SIZE IS NOT TO BE USED FOR NEW DESIGN. SEE KC167 FOR NEW DESIGN.
8. DO NOT USE THIS STANDARD FOR ITEMS WHICH CANNOT BE IDENTIFIED BY THE LIMITATIONS CONTAINED HEREIN.
9. ALL PARTS NOT MANUFACTURED BY GRAY TOOL CO. MUST BE CERTIFIED BY THE MANUFACTURER TO BE INTERCHANGEABLE WITH THE GRAY TOOL PART NUMBER.

EXAMPLE OF PART NOS. BASIC PART NUMBER KC166-3A

- MATERIAL CODE
- DASH NUMBER

APPROVED SOURCE: COMMERCIAL PARTS CAN BE PURCHASED FROM: VETCO-GRAY 10777 NW FWY P.O. BOX 2291, HOUSTON, TX 77001-2291.

ALTERNATE SOURCES:

OTECO EQUIPMENT COMPANY
2811 TROUT STREET
P.O. BOX 1849
HOUSTON, TX 77251-1849

REFLANGE, INC.
5730 CENTRALCREST
HOUSTON, TX 77092

APPROVED: 2-6-76 REVISED: © CHANGED APPROVED SOURCE. 10-2-92

CUSTODIAN: JOHN F. KENNEDY SPACE CENTER		
PROCUREMENT SPEC. NONE	HUB, TAPPED BLIND	STANDARD PART
COORDINATION STATUS KSC DE		KC166
		SHEET 1 OF 2

NOTICE: WHEN GOVERNMENT DRAWINGS, SPECIFICATIONS OR OTHER DATA ARE USED FOR ANY PURPOSE OTHER THAN IN CONNECTION WITH A DEFINITELY RELATED GOVERNMENT PROCUREMENT OPERATION, THE UNITED STATES GOVERNMENT THEREBY INCURS NO RESPONSIBILITY NOR ANY OBLIGATION WHATSOEVER AND THE FACT THAT THE GOVERNMENT MAY HAVE FORMULATED, FURNISHED, OR IN ANY WAY SUPPLIED THE SAID DRAWINGS, SPECIFICATIONS, OR OTHER DATA IS NOT REGARDED BY IMPLICATION OR OTHERWISE AS IN ANY MANNER LICENSING THE HOLDER OR ANY OTHER PERSON OR CORPORATION, OR CONVEYING ANY RIGHTS OR PERMISSION TO MANUFACTURE, USE, OR SELL ANY PATENTED INVENTION THAT MAY IN ANY WAY BE RELATED THERETO.

FED SUP CLASS
4730

DASH NO.	HUB SIZE	MS33649 THREAD SIZE	OPERATING PRESSURE RATING (PSIG) MAT'L CODE -A	-B	DIMENSIONS A	C	D	E	F	MATERIAL CODE -A SA-105 GRII GRAYLOC STK NO.	-B SA-182 F-316 GRAYLOC STK NO.
-1	1GR4	-4	9600	9600	.172	2.000	1.750	1.500	.313	I-4708-1	I-4709-1
-2		-6	6900	6900	.297					I-4708-5	I-4709-5
-3		-8	7400	7400	.391					I-4708-9	I-4709-9
7 -4		-12	6500	6500						I-4708-13	I-4709-13
-5	1GR5	-4	9600	9600	.172					I-4708-2	I-4709-2
-6		-6	6900	6900	.297					I-4708-6	I-4709-6
-7		-8	7400	7400	.391					I-4708-10	I-4709-10
7 -8		-12	6500	6500						I-4708-14	I-4709-14
-9	1GR7	-4	8784	8180	.172					I-4708-3	I-4709-3
-10		-6	6900	6900	.297					I-4708-7	I-4709-7
-11		-8	7400	7400	.391					I-4708-11	I-4709-11
7 -12		-12	6500	6500						I-4708-15	I-4709-15
-13	1GR11	-4	4264	4340	.172					I-4708-4	I-4709-4
-14		-6	4264	4340	.297					I-4708-8	I-4709-8
-15		-8	4264	4340	.391					I-4708-12	I-4709-12
7 -16		-12	4264	4340						I-4708-16	I-4709-16

REVISED: © CHANGED APPROVED SOURCE ON SHEET 1. 10-2-92

APPROVED: 2-6-76

CUSTODIAN: JOHN F. KENNEDY SPACE CENTER

PROCUREMENT SPEC.
NONE

COORDINATION STATUS
KSC DE

HUB, TAPPED BLIND

STANDARD PART
KC166

SHEET 2 OF 2

NOTICE: WHEN GOVERNMENT DRAWINGS, SPECIFICATIONS OR OTHER DATA ARE USED FOR ANY PURPOSE OTHER THAN IN CONNECTION WITH A DEFINITELY RELATED GOVERNMENT PROCUREMENT OPERATION, THE UNITED STATES GOVERNMENT THEREBY INCURS NO RESPONSIBILITY NOR ANY OBLIGATION WHATSOEVER AND THE FACT THAT THE GOVERNMENT MAY HAVE FORMULATED, FURNISHED, OR IN ANY WAY SUPPLIED THE SAID DRAWINGS, SPECIFICATIONS, OR OTHER DATA IS NOT REGARDED BY IMPLICATION OR OTHERWISE AS IN ANY MANNER LICENSING THE HOLDER OR ANY OTHER PERSON OR CORPORATION, OR CONVEYING ANY RIGHTS OR PERMISSION TO MANUFACTURE, USE, OR SELL ANY PATENTED INVENTION THAT MAY IN ANY WAY BE RELATED THERETO.

NOTICE: WHEN GOVERNMENT DRAWINGS, SPECIFICATIONS OR OTHER DATA ARE USED FOR ANY PURPOSE OTHER THAN IN CONNECTION WITH A DEFINITELY RELATED GOVERNMENT PROCUREMENT OPERATION, THE UNITED STATES GOVERNMENT THEREBY INCURS NO RESPONSIBILITY NOR ANY OBLIGATION WHATSOEVER AND THE FACT THAT THE GOVERNMENT MAY HAVE FORMULATED, FURNISHED, OR IN ANY WAY SUPPLIED THE SAID DRAWINGS, SPECIFICATIONS, OR OTHER DATA IS NOT REGARDED BY IMPLICATION OR OTHERWISE AS IN ANY MANNER LICENSING THE HOLDER OR ANY OTHER PERSON OR CORPORATION, OR CONVEYING ANY RIGHTS OR PERMISSION TO MANUFACTURE, USE, OR SELL ANY PATENTED INVENTION THAT MAY IN ANY WAY BE RELATED THERETO.

FED SUP CLASS
4730

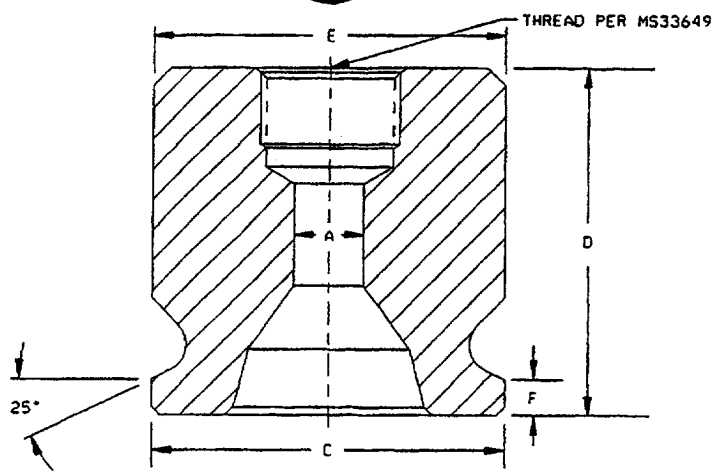

MATERIAL CODE: ADD A AFTER DASH NO. TO DENOTE SA-105-GRII.
ADD B AFTER DASH NO. TO DENOTE SA-182-F316.

TEMPERATURE RANGE: SEE MATERIAL SPECIFICATION.

NOTES:

1. ALL MATERIALS ARE PER ASTM SPECIFICATIONS
2. ALL DIMENSIONS ARE IN INCHES.
3. TOLERANCE: SEE KC161.
4. FOR DESIGN FEATURE PURPOSES, THIS DRAWING TAKES PRECEDENCE OVER PROCUREMENT DOCUMENTS REFERENCED HEREIN.
5. REFERENCED DOCUMENTS SHALL BE OF THE ISSUE IN EFFECT ON THE DATE OF INVITATION FOR BID.
6. HUB PRESSURE RATING IS THE LOWER OF EITHER THE VENDOR'S PRESSURE LIMIT ON THE HUB OR KSC'S PRESSURE LIMIT ON THE FITTING WHICH SCREWS INTO THE THREADED HOLE.
7. SEE KC166 FOR PREFERRED CONFIGURATION OF HUBS TAPPED WITH THREAD SIZES MS33649-4, -6, -8.
8. DO NOT USE THIS STANDARD FOR ITEMS WHICH CANNOT BE IDENTIFIED BY THE LIMITATIONS CONTAINED HEREIN.
9. ALL PARTS NOT MANUFACTURED BY GRAY TOOL CO. MUST BE CERTIFIED BY THE MANUFACTURER TO BE INTERCHANGEABLE WITH THE GRAY TOOL PART NUMBER.

EXAMPLE OF PART NOS. BASIC PART NUMBER KC167-3A
- MATERIAL CODE
- DASH NUMBER

APPROVED SOURCE: COMMERCIAL PARTS CAN BE PURCHASED FROM: VETCO-GRAY INC. 10777 NW FWY P.O. BOX 2291, HOUSTON, TX 77001-2291.

ALTERNATE SOURCES:

OTECO EQUIPMENT COMPANY
2811 TROUT STREET
P.O. BOX 1849
HOUSTON, TX 77251-1849

REFLANGE, INC.
5730 CENTRALCREST
HOUSTON, TX 77092

APPROVED: 2-6-76 REVISED: (C) CHANGED APPROVED SOURCE. 10-2-92

CUSTODIAN: JOHN F. KENNEDY SPACE CENTER		
PROCUREMENT SPEC. NONE	HUB, TAPPED	STANDARD PART
COORDINATION STATUS KSC DE		KC167
		SHEET 1 OF 3

FED SUP CLASS 4730

DASH NO.	HUB SIZE	MS33649 THREAD SIZE	OPERATING PRESSURE RATING (PSIG) MAT'L CODE -A	-B	DIMENSIONS A	C	D	E	F	MATERIAL CODE -A SA-105 GRII GRAYLOC STK NO.	-B SA-182 F-316 GRAYLOC STK NO.
7 -1	1GR4	-4	9600	9600	.172	2.000	3.000	2.000	.313	I-4695-7	I-4725-7
7 -2		-6	6900	6900	.297					I-4695-1	I-4725-1
7 -3		-8	7400	7400	.391					I-4695-3	I-4725-3
-4		-12	6500	6500	.500					I-4695-5	I-4725-5
-5		-16	5300	5300	.500					I-4695-21	I-4725-21
7 -6	1GR5	-4	9600	9600	.172					I-4695-8	I-4725-8
7 -7		-6	6900	6900	.297					I-4695-2	I-4725-2
7 -8		-8	7400	7400	.391					I-4695-4	I-4725-4
-9		-12	6500	6500	.609					I-4695-6	I-4725-6
-10		-16	5300	5300	.625					I-4695-22	I-4725-22
7 -11	1GR7	-4	8784	8180	.172					I-4695-9	I-4725-9
7 -12		-6	6900	6900	.297					I-4695-11	I-4725-11
7 -13		-8	7400	7400	.391					I-4695-13	I-4725-13
-14		-12	6500	6500	.609					I-4695-19	I-4725-19
-15		-16	5300	5300	.844					I-4695-23	I-4725-23
7 -16	1GR11	-4	4264	4340	.172					I-4695-10	I-4725-10
7 -17		-6	4264	4340	.297					I-4695-12	I-4725-12
7 -18		-8	4264	4340	.391					I-4695-14	I-4725-14
-19		-12	4264	4340	.609					I-4695-20	I-4725-20
-20		-16	4264	4340	.844					I-4695-24	I-4725-24
-21	1½GR14	-4	6547	6040	.172	3.125	3.250	3.125	.437	I-4695-25	I-4725-25
-22		-6	6547	6040	.297					I-4695-26	I-4725-26
-23		-3	6547	6040	.391					I-4695-27	I-4725-27
-24		-12	6500	6040	.609					I-4695-29	I-4725-29
-25		-16	5300	5300	.844					I-4695-30	I-4725-30

REVISED: (C) CHANGED APPROVED SOURCE ON SHEET 1. 10-2-92

APPROVED: 2-6-76

CUSTODIAN: JOHN F. KENNEDY SPACE CENTER

PROCUREMENT SPEC. NONE

COORDINATION STATUS KSC DE

HUB, TAPPED

STANDARD PART KC167

SHEET 2 OF 3

NOTICE: WHEN GOVERNMENT DRAWINGS, SPECIFICATIONS OR OTHER DATA ARE USED FOR ANY PURPOSE OTHER THAN IN CONNECTION WITH A DEFINITELY RELATED GOVERNMENT PROCUREMENT OPERATION, THE UNITED STATES GOVERNMENT THEREBY INCURS NO RESPONSIBILITY NOR ANY OBLIGATION WHATSOEVER AND THE FACT THAT THE GOVERNMENT MAY HAVE FORMULATED, FURNISHED, OR IN ANY WAY SUPPLIED THE SAID DRAWINGS, SPECIFICATIONS, OR OTHER DATA IS NOT REGARDED BY IMPLICATION OR OTHERWISE AS IN ANY MANNER LICENSING THE HOLDER OR ANY OTHER PERSON OR CORPORATION, OR CONVEYING ANY RIGHTS OR PERMISSION TO MANUFACTURE, USE, OR SELL ANY PATENTED INVENTION THAT MAY IN ANY WAY BE RELATED THERETO.

FED SUP CLASS
4730

DASH NO.	HUB SIZE	MS33649 THREAD SIZE	OPERATING PRESSURE RATING (PSIG) MAT'L CODE -A	-B	DIMENSIONS A	C	D	E	F	MATERIAL CODE -A SA-105 GRII GRAYLOC STK NO.	-B SA-182 F-316 GRAYLOC STK NO.
-26	2GR20	-4	4870	4640	.172	3.625	3.500	3.625	.437	I-4695-31	I-4725-31
-27		-6	4870	4640	.297					I-4695-32	I-4725-32
-28		-8	4870	4640	.391					I-4695-33	I-4725-33
-29		-12	4870	4640	.609					I-4695-35	I-4725-35
-30		-16	4870	4640	.844					I-4695-36	I-4725-36
-31		-20	4870	4640	1.078					I-4695-55	I-4725-55
-32		-24	4600	4600	1.312					I-4695-56	I-4725-56
-33		-32	4600	4600	1.781					I-4695-58	I-4725-58
-34	2½-3GR25	-4	6617	6000	.172	5.000	4.250	5.000	.500	I-4695-37	I-4725-37
-35		-6	6617	6000	.297					I-4695-38	I-4725-38
-36		-8	6617	6000	.391					I-4695-39	I-4725-39
-37		-12	6500	6000	.609					I-4695-41	I-4725-41
-38		-16	5300	5300	.844					I-4695-42	I-4725-42
-39		-20	5200	5200	1.078					I-4695-59	I-4725-59
-40		-24	4600	4600	1.312					I-4695-60	I-4725-60
-41		-32	4600	4600	1.781					I-4695-62	I-4725-62
-42	4GR31	-4	7969	7120	.172	6.000	5.000	6.000	.500	I-4695-43	I-4725-43
-43		-6	6900	6900	.297					I-4695-44	I-4725-44
-44		-8	7400	7120	.391					I-4695-45	I-4725-45
-45		-12	6500	6500	.609					I-4695-47	I-4725-47
-46		-16	5300	5300	.844					I-4695-48	I-4725-46
-47		-20	5200	5200	1.078					I-4695-63	I-4725-63
-48		-24	4600	4600	1.312					I-4695-64	I-4725-64
-49		-32	4600	4600	1.781					I-4695-66	I-4725-66
-50	6GR52	-4	5944	5080	.172	9.250	5.500	9.250	.812	I-4695-49	I-4725-49
-51		-6	5944	5080	.297					I-4695-50	I-4725-50
-52		-8	5944	5080	.391					I-4695-51	I-4725-51
-53		-12	5944	5080	.609					I-4695-53	I-4725-53
-54		-16	5300	5080	.844					I-4695-54	I-4725-54
-55		-20	5200	5080	1.078					I-4695-67	I-4725-67
-56		-24	4600	4600	1.312					I-4695-68	I-4725-68
-57		-32	4600	4600	1.781					I-4695-70	I-4725-70

REVISED: © CHANGED APPROVED SOURCE ON SHEET 1. 10-2-92

APPROVED: 2-6-76

NOTICE: WHEN GOVERNMENT DRAWINGS, SPECIFICATIONS OR OTHER DATA ARE USED FOR ANY PURPOSE OTHER THAN IN CONNECTION WITH A DEFINITELY RELATED GOVERNMENT PROCUREMENT OPERATION, THE UNITED STATES GOVERNMENT THEREBY INCURS NO RESPONSIBILITY NOR ANY OBLIGATION WHATSOEVER AND THE FACT THAT THE GOVERNMENT MAY HAVE FORMULATED, FURNISHED, OR IN ANY WAY SUPPLIED THE SAID DRAWINGS, SPECIFICATIONS, OR OTHER DATA IS NOT REGARDED BY IMPLICATION OR OTHERWISE AS IN ANY MANNER LICENSING THE HOLDER OR ANY OTHER PERSON OR CORPORATION, OR CONVEYING ANY RIGHTS OR PERMISSION TO MANUFACTURE, USE, OR SELL ANY PATENTED INVENTION THAT MAY IN ANY WAY BE RELATED THERETO.

CUSTODIAN: JOHN F. KENNEDY SPACE CENTER

PROCUREMENT SPEC.
NONE

COORDINATION STATUS
KSC DE

HUB, TAPPED

STANDARD PART
KC167

SHEET 3 OF 3

FED SUP CLASS
4730

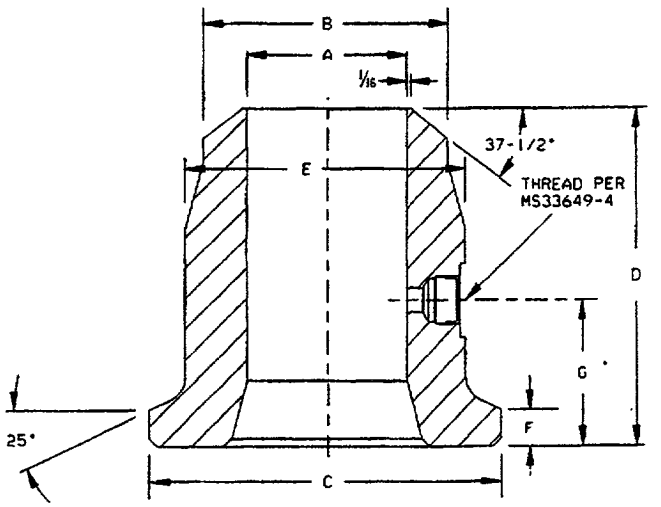

MATERIAL CODE: ADD A AFTER DASH NO. TO DENOTE SA-105-GR11.
ADD B AFTER DASH NO. TO DENOTE SA-182-F316.

TEMPERATURE RANGE: SEE MATERIAL SPECIFICATION.

NOTES:

1. ALL MATERIALS ARE PER ASTM SPECIFICATIONS
2. ALL DIMENSIONS ARE IN INCHES.
3. TOLERANCE: SEE KC161.
4. FOR DESIGN FEATURE PURPOSES, THIS DRAWING TAKES PRECEDENCE OVER PROCUREMENT DOCUMENTS REFERENCED HEREIN.
5. REFERENCED DOCUMENTS SHALL BE OF THE ISSUE IN EFFECT ON THE DATE OF INVITATION FOR BID.
6. HUB PRESSURE RATING IS THE LOWER OF EITHER THE VENDOR'S PRESSURE LIMIT ON THE HUB OR KSC'S PRESSURE LIMIT ON THE FITTING WHICH SCREWS INTO THE THREADED HOLE.
7. THIS PIPE SIZE DOES NOT HAVE A STANDARD VENDOR HUB.
8. DO NOT USE THIS STANDARD FOR ITEMS WHICH CANNOT BE IDENTIFIED BY THE LIMITATIONS CONTAINED HEREIN.
9. ALL PARTS NOT MANUFACTURED BY GRAY TOOL CO. MUST BE CERTIFIED BY THE MANUFACTURER TO BE INTERCHANGEABLE WITH THE GRAY TOOL PART NUMBER.

EXAMPLE OF PART NOS. BASIC PART NUMBER KC168-3A
- MATERIAL CODE
- DASH NUMBER

APPROVED SOURCE: COMMERCIAL PARTS CAN BE PURCHASED FROM: VETCO-GRAY INC. 10777 NW FWY P.O. BOX 2291, HOUSTON, TX 77001-2291.

ALTERNATE SOURCES:

OTECO EQUIPMENT COMPANY
2811 TROUT STREET
P.O. BOX 1849
HOUSTON, TX 77251-1849

REFLANGE, INC.
5730 CENTRALCREST
HOUSTON, TX 77092

REVISED: (D) CHANGED APPROVED SOURCE. 10-2-92

APPROVED: 2-6-76

CUSTODIAN: JOHN F. KENNEDY SPACE CENTER

PROCUREMENT SPEC.	HUB, PRESSURE TAPPED	STANDARD PART
NONE		KC168
COORDINATION STATUS		SHEET 1 OF 3
KSC DE		

NOTICE: WHEN GOVERNMENT DRAWINGS, SPECIFICATIONS OR OTHER DATA ARE USED FOR ANY PURPOSE OTHER THAN IN CONNECTION WITH A DEFINITELY RELATED GOVERNMENT PROCUREMENT OPERATION, THE UNITED STATES GOVERNMENT THEREBY INCURS NO RESPONSIBILITY NOR ANY OBLIGATION WHATSOEVER AND THE FACT THAT THE GOVERNMENT MAY HAVE FORMULATED, FURNISHED, OR IN ANY WAY SUPPLIED THE SAID DRAWINGS, SPECIFICATIONS, OR OTHER DATA IS NOT REGARDED BY IMPLICATION OR OTHERWISE AS IN ANY MANNER LICENSING THE HOLDER OR ANY OTHER PERSON OR CORPORATION, OR CONVEYING ANY RIGHTS OR PERMISSION TO MANUFACTURE, USE, OR SELL ANY PATENTED INVENTION THAT MAY IN ANY WAY BE RELATED THERETO.

FED SUP CLASS 4730

DASH NO.	PIPE SIZE	PIPE SCHED.	HUB SIZE	OPERATING PRESSURE RATING (PSIG) MAT'L CODE -A	-B	DIMENSIONS A	B	C	D	E	F	G	MATERIAL CODE -A SA-105 GR II GRAYLOC STK NO.	-B SA-182 F-316 GRAYLOC STK NO.
-1	½	40	1GR5	9600	9600	.622	.840	2.000	4.313	2.688	.313	2.188	I-4839-A1	I-4839-B1
-2		80				.546							I-4839-A2	I-4839-B2
-3		160	1GR4			.466							I-4839-A3	I-4839-B3
-4		XXS				.252							I-4839-A4	I-4839-B4
-5	¾	40	1GR7	8784	8180	.824	1.050						I-4839-A5	I-4839-B5
-6		80				.742							I-4839-A6	I-4839-B6
-7		160	1GR4	9600	9600	.614							I-4839-A7	I-4839-B7
-8		XXS	1GR5			.434							I-4839-A8	I-4839-B8
-9	1	40	1GR11	4211	4340	1.049	1.315						I-4839-A9	I-4839-B9
-10		80				.957							I-4839-A10	I-4839-B10
-11		160	1GR7	8784	8180	.815							I-4839-A11	I-4839-B11
-12		XXS	1GR5	9600	9600	.599							I-4839-A12	I-4839-B12
-13	1½	40	1½GR14	6547	6040	1.610	1.900	3.125		3.250	.437	2.313	I-4839-A17	I-4839-B17
-14		80				1.500							I-4839-A18	I-4839-B18
-15		160				1.338							I-4839-A19	I-4839-B19
-16		XXS				1.100							I-4839-A20	I-4839-B20
-17	2	40	2GR20	4870	4640	2.067	2.375	3.625	4.500	3.688		2.375	I-4839-A21	I-4839-B21
-18		80				1.939							I-4839-A22	I-4839-B22
-19		160				1.689							I-4839-A23	I-4839-B23
-20		XXS	2GR14	9600	9600	1.503							I-4839-A24	I-4839-B24
-21	2½	40	2½-3GR25	6617	6000	2.469	2.875	5.000	5.000	5.000	.500		I-4839-A25	I-4839-B25
-22		80				2.323							I-4839-A26	I-4839-B26
-23		160	2½-3GR20	9600	9600	2.125							I-4839-A27	I-4839-B27
-24		XXS				1.771							I-4839-A28	I-4839-B28
-25	3	40	2½-3GR27	3635	3480	3.068	3.500	5.000	5.000	5.000	.500		I-4839-A29	I-4839-B29
-26		80				2.900							I-4839-A30	I-4839-B30
-27		160	2½-3GR25	6617	6000	2.626							I-4839-A31	I-4839-B31
-28		XXS				2.300							I-4839-A32	I-4839-B32
-29	3½	40	4GR34	4637	4340	3.548	4.000	6.000	5.375	6.000	.500	2.688	I-4839-A33	I-4839-B33
-30		80				3.364							I-4839-A34	I-4839-B34
-31		XXS	4GR27	7	7	2.728							I-4839-A35	I-4839-B35

REVISED: (D) CHANGED APPROVED SOURCE ON SHEET 1. 10-2-92

APPROVED: 2-6-76

CUSTODIAN: JOHN F. KENNEDY SPACE CENTER

PROCUREMENT SPEC. NONE

COORDINATION STATUS KSC DE

HUB, PRESSURE TAPPED

STANDARD PART KC168

SHEET 2 OF 3

NOTICE: WHEN GOVERNMENT DRAWINGS, SPECIFICATIONS OR OTHER DATA ARE USED FOR ANY PURPOSE OTHER THAN IN CONNECTION WITH A DEFINITELY RELATED GOVERNMENT PROCUREMENT OPERATION, THE UNITED STATES GOVERNMENT THEREBY INCURS NO RESPONSIBILITY NOR ANY OBLIGATION WHATSOEVER AND THE FACT THAT THE GOVERNMENT MAY HAVE FORMULATED, FURNISHED, OR IN ANY WAY SUPPLIED THE SAID DRAWINGS, SPECIFICATIONS, OR OTHER DATA IS NOT REGARDED BY IMPLICATION OR OTHERWISE AS IN ANY MANNER LICENSING THE HOLDER OR ANY OTHER PERSON OR CORPORATION, OR CONVEYING ANY RIGHTS OR PERMISSION TO MANUFACTURE, USE, OR SELL ANY PATENTED INVENTION THAT MAY IN ANY WAY BE RELATED THERETO.

FED SUP CLASS
4730

DASH NO.	PIPE SIZE	PIPE SCHED.	HUB SIZE	OPERATING PRESSURE RATING (PSIG) MAT'L CODE -A	-B	DIMENSIONS A	B	C	D	E	F	G	MATERIAL CODE -A SA-105 GRII GRAYLOC STK NO.	-B SA-182 F-316 GRAYLOC STK NO.
-32	4	40	4GR40	2493	2460	4.026	4.500	6.000	5.000	6.000	.500	2.688	I-4839-A36	I-4839-B36
-33		80				3.826							I-4839-A37	I-4839-B37
-34		160	4GR34	4637	4340	3.438			5.375				I-4839-A38	I-4839-B38
-35		XXS	4GR31	7969	7120	3.152							I-4839-A39	I-4839-B39
-36	5	40	5GR52	2703	2580	5.047	5.563	7.500	5.250	7.500	.625	2.938	I-4839-A40	I-4839-B40
-37		80				4.813							I-4839-A41	I-4839-B41
-38		160	5GR46	5149	4720	4.313			5.563				I-4839-A42	I-4839-B42
-39		XXS	5GR40	7839	6700	4.063			5.750				I-4839-A43	I-4839-B43
-40	6	40	6GR62	3192	2960	6.065	6.625	9.250	6.000	9.250	.750	3.250	I-4839-A44	I-4839-B44
-41		80				5.761							I-4839-A45	I-4839-B45
-42		160	6GR52	5944	5080	5.189			6.625		.812		I-4839-A46	I-4839-B46
-43		XXS				4.897							I-4839-A47	I-4839-B47

REVISED: (D) CHANGED APPROVED SOURCE ON SHEET 1. 10-2-92

APPROVED: 2-6-76

CUSTODIAN: JOHN F. KENNEDY SPACE CENTER

PROCUREMENT SPEC.
NONE

COORDINATION STATUS
KSC DE

HUB, PRESSURE TAPPED

STANDARD PART
KC168

SHEET 3 OF 3

NOTICE: WHEN GOVERNMENT DRAWINGS, SPECIFICATIONS OR OTHER DATA ARE USED FOR ANY PURPOSE OTHER THAN IN CONNECTION WITH A DEFINITELY RELATED GOVERNMENT PROCUREMENT OPERATION, THE UNITED STATES GOVERNMENT THEREBY INCURS NO RESPONSIBILITY NOR ANY OBLIGATION WHATSOEVER AND THE FACT THAT THE GOVERNMENT MAY HAVE FORMULATED, FURNISHED, OR IN ANY WAY SUPPLIED THE SAID DRAWINGS, SPECIFICATIONS, OR OTHER DATA IS NOT REGARDED BY IMPLICATION OR OTHERWISE AS IN ANY MANNER LICENSING THE HOLDER OR ANY OTHER PERSON OR CORPORATION, OR CONVEYING ANY RIGHTS OR PERMISSION TO MANUFACTURE, USE, OR SELL ANY PATENTED INVENTION THAT MAY IN ANY WAY BE RELATED THERETO.

FED SUP CLASS
4730

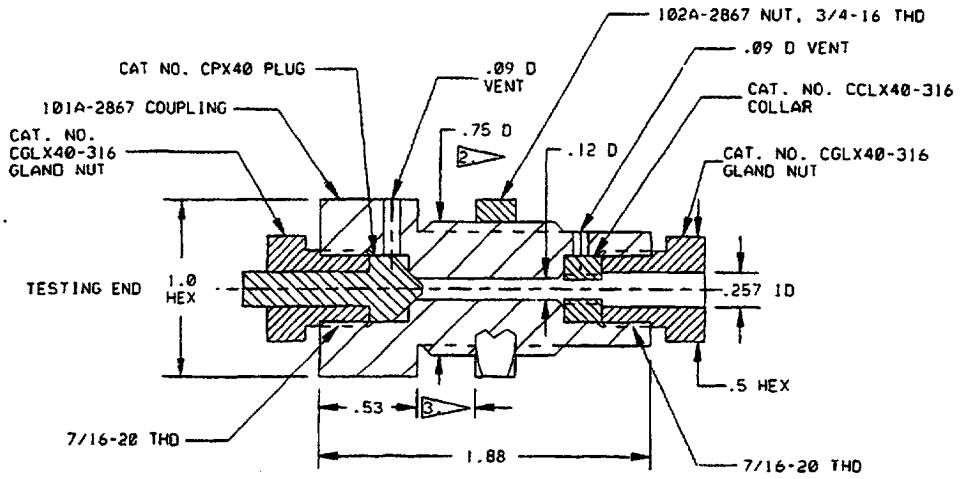

MATERIAL: ALL MATERIAL SHALL BE CLASS 316 STAINLESS STEEL.

FINISH: PASSIVATE.

NOTES:

1. REMOVE BURRS AND SLIVERS. BREAK SHARP EDGES UNLESS OTHERWISE NOTED.
2. ALL DIMENSIONS ARE REFERENCE ONLY.
3. 13/16 D HOLE REQUIRED FOR PANEL MOUNTING.
4. 0.38 MAXIMUM PANEL THICKNESS.
5. TORQUE GLAND NUTS TO 20 FT LBS.
6. CONFIGURATION SHOWN IS THAT OF TEST PORT BUT ASSEMBLY MAY BE USED AS HIGH PRESSURE BULKHEAD COUPLING.
7. WHEN COUPLING IS USED AS TEST PORT, FLUID PRESSURE IS BLED DOWN THRU VENT BY LOOSENING GLAND NUT NOT MORE THAN ONE TURN.
8. ASSEMBLY WEIGHT FOR KC169 IS APPROXIMATELY 0.30 LBS.
9. COUPLING ASSEMBLY IS SIMILAR TO AUTOCLAVE ENGINEERS INCLUDING CATALOG NO. 20BFX4466-316 EXCEPT FOR PLUG. THIS STANDARD INCLUDES ALL PARTS ILLUSTRATED ABOVE.

USE LIMITS:

1. 20,000 PSIG MAXIMUM PRESSURE.
2. TO BE USED WITH 1/4" X .109 STAINLESS STEEL TUBING.

SUGGESTED SOURCE: COMMERCIAL PARTS CAN BE PURCHASED FROM AUTOCLAVE ENGINEERS, 2930 WEST 22ND STREET, P.O. BOX 4007 ERIE, PA 16512

APPROVED: 7-13-76 REVISED: (A) REV & REDRAWN 8-1-90

CUSTODIAN: JOHN F. KENNEDY SPACE CENTER		
PROCUREMENT SPEC. NONE	COUPLING ASSEMBLY, BLKHD SUPER PRESSURE PORT	STANDARD PART
COORDINATION STATUS KSC DE		KC169
		SHEET 1 OF 1

NOTICE: WHEN GOVERNMENT DRAWINGS, SPECIFICATIONS OR OTHER DATA ARE USED FOR ANY PURPOSE OTHER THAN IN CONNECTION WITH A DEFINITELY RELATED GOVERNMENT PROCUREMENT OPERATION, THE UNITED STATES GOVERNMENT THEREBY INCURS NO RESPONSIBILITY NOR ANY OBLIGATION WHATSOEVER AND THE FACT THAT THE GOVERNMENT MAY HAVE FORMULATED, FURNISHED, OR IN ANY WAY SUPPLIED THE SAID DRAWINGS, SPECIFICATIONS, OR OTHER DATA IS NOT REGARDED BY IMPLICATION OR OTHERWISE AS IN ANY MANNER LICENSING THE HOLDER OR ANY OTHER PERSON OR CORPORATION, OR CONVEYING ANY RIGHTS OR PERMISSION TO MANUFACTURE, USE, OR SELL ANY PATENTED INVENTION THAT MAY IN ANY WAY BE RELATED THERETO.

NOTICE: WHEN GOVERNMENT DRAWINGS, SPECIFICATIONS OR OTHER DATA ARE USED FOR ANY PURPOSE OTHER THAN IN CONNECTION WITH A DEFINITELY RELATED GOVERNMENT PROCUREMENT OPERATION, THE UNITED STATES GOVERNMENT THEREBY INCURS NO RESPONSIBILITY NOR ANY OBLIGATION WHATSOEVER AND THE FACT THAT THE GOVERNMENT MAY HAVE FORMULATED, FURNISHED, OR IN ANY WAY SUPPLIED THE SAID DRAWINGS, SPECIFICATIONS, OR OTHER DATA IS NOT REGARDED BY IMPLICATION OR OTHERWISE AS IN ANY MANNER LICENSING THE HOLDER OR ANY OTHER PERSON OR CORPORATION, OR CONVEYING ANY RIGHTS OR PERMISSION TO MANUFACTURE, USE, OR SELL ANY PATENTED INVENTION THAT MAY IN ANY WAY BE RELATED THERETO.

FED SUP CLASS
4730

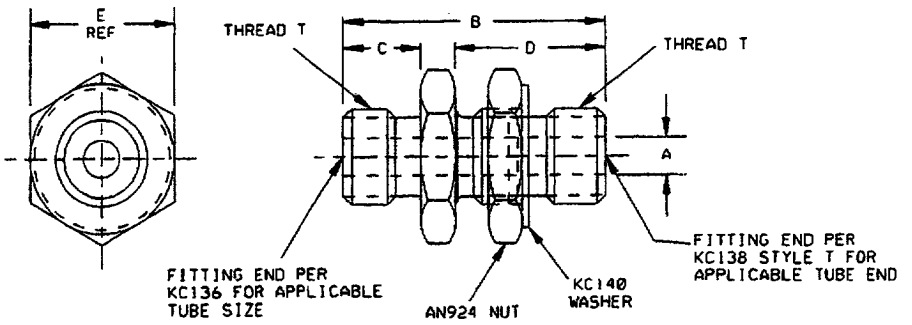

DASH NO.		TUBE OD REF	THREAD T REF	A REF	B +.000 -.060	C REF	D REF	E REF	BULKHEAD NUT		WASHER	
CRE STEEL	AL ALLOY								FOR CRE STEEL ASSY *	FOR AL ALLOY ASSY	FOR CRE STEEL ASSY	FOR AL ALLOY ASSY
K4	D4	1/4	7/16-20	.172	1.252	.389	.703	.688	AN924-K4	AN924-D4	KC140C4	KC140D4
K6	D6	3/8	9/16-18	.297	1.436	.420	.766	.813	AN924-K6	AN924-D6	KC140C6	KC140D6
K8	D8	1/2	3/4-16	.391	1.636	.521	.875	1.000	AN924-K8	AN924-D8	KC140C8	KC140D8
K10	D10	5/8	7/8-14	.484	1.873	.567	1.016	1.125	AN924-K10	AN924-D10	KC140C10	KC140D10
K12	D12	3/4	1-1/16-12	.609	2.172	.636	1.156	1.375	AN924-K12	AN924-D12	KC140C12	KC140D12
K16	D16	1	1-5/16-12	.844	2.208	.672		1.625	AN924-K16	AN924-D16	KC140C16	KC140D16
K20	D20	1 1/4	1-5/8-12	1.078	2.208	.672		1.875	AN924-K20	AN924-D20	KC140C20	KC140D20
K24	D24	1 1/2	1-7/8-12	1.312	2.256	.720		2.125	AN924-K24	AN924-D24	KC140C24	KC140D24
K28	D28	1 3/4	2-1/4-12	1.547	2.308	.772		2.500	AN924-K28	AN924-D28	KC140C28	KC140D28
K32	D32	2	2-1/2-12	1.781	2.423	.887		2.750	AN924-K32	AN924-D32	KC140C32	KC140D32

MATERIAL: SEE PROCUREMENT SPECIFICATION.
ALUMINUM ALLOY, 2014-T6, CODE "D"
CORROSION RESISTANT STEEL (CLASS 316), CODE "K" (WAS CODE "C")
*AN924 CRES NUTS MAY BE EITHER 304, CODE "J" OR 316, CODE "K".

FINISH: SEE PROCUREMENT SPECIFICATION.

SCREW THREAD: SEE PROCUREMENT SPECIFICATION.

NOTES:
1. REMOVE BURRS AND SLIVERS. BREAK SHARP EDGES UNLESS OTHERWISE NOTED.
2. DIMENSIONS IN INCHES. UNLESS OTHERWISE SPECIFIED, TOLERANCE DECIMALS ±.016.
3. FOR DESIGN FEATURE PURPOSES, THIS DRAWING TAKES PRECEDENCE OVER PROCUREMENT DOCUMENTS REFERENCED HEREIN.
4. REFERENCED DOCUMENTS SHALL BE OF THE ISSUE IN EFFECT ON THE DATE OF INVITATION FOR BID.
5. MARKING OF FITTINGS SHALL BE CONSISTENT WITH PROCUREMENT SPECIFICATION USING APPLICABLE KC STANDARD AND PART NUMBER DESIGNATIONS AS SHOWN ON THIS DRAWING.

EXAMPLE OF PART NOS.
KC170K8 = UNION, ADJUSTABLE END, 1/2" OD TUBING, CORROSION RESISTANT STEEL
KC170D12 = UNION, ADJUSTABLE END, 3/4" OD TUBING, ALUMINUM ALLOY

REVISED: (B) REV NUT MAT'L, 4-10-91

APPROVED: 11-1-83

CUSTODIAN: JOHN F. KENNEDY SPACE CENTER

PROCUREMENT SPEC. KSC-F-124

COORDINATION STATUS KSC DE

UNION, ADJUSTABLE END

STANDARD PART KC170

SHEET 1 OF 1

NOTICE: WHEN GOVERNMENT DRAWINGS, SPECIFICATIONS OR OTHER DATA ARE USED FOR ANY PURPOSE OTHER THAN IN CONNECTION WITH A DEFINITELY RELATED GOVERNMENT PROCUREMENT OPERATION, THE UNITED STATES GOVERNMENT THEREBY INCURS NO RESPONSIBILITY NOR ANY OBLIGATION WHATSOEVER AND THE FACT THAT THE GOVERNMENT MAY HAVE FORMULATED, FURNISHED, OR IN ANY WAY SUPPLIED THE SAID DRAWINGS, SPECIFICATIONS, OR OTHER DATA IS NOT REGARDED BY IMPLICATION OR OTHERWISE AS IN ANY MANNER LICENSING THE HOLDER OR ANY OTHER PERSON OR CORPORATION, OR CONVEYING ANY RIGHTS OR PERMISSION TO MANUFACTURE, USE, OR SELL ANY PATENTED INVENTION THAT MAY IN ANY WAY BE RELATED THERETO.

FED SUP CLASS 4730

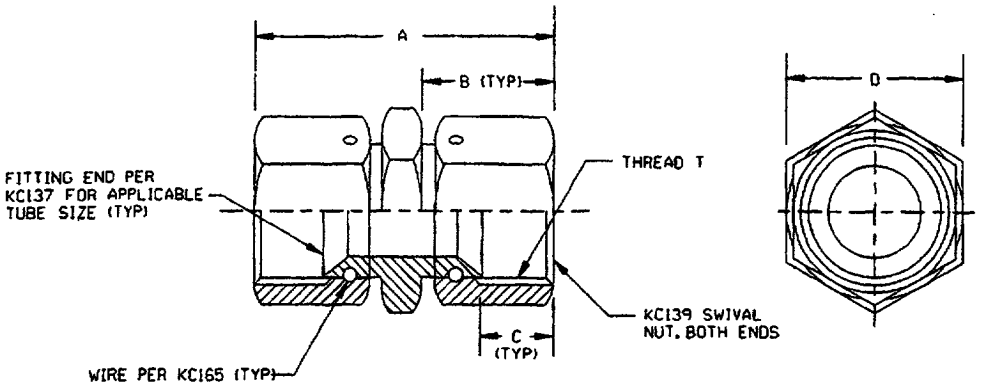

DASH NUMBER		TUBE OD REF	THREAD T REF	A REF	B ±.031	C REF	D REF	SWIVEL NUT		RETAINING WIRE
CRE STEEL	AL ALLOY							FOR CRE STEEL ASSY	FOR AL ALLOY ASSY	
K4	D4	1/4	7/16-20	1.61	.73	.36	11/16	KC139K4	KC139D4	KC165-4
K6	D6	3/8	9/16-18	1.97	.85	.39	13/16	KC139K6	KC139D6	KC165-6
K8	D8	1/2	3/4-16	2.05	.90	.44	1	KC139K8	KC139D8	KC165-8
K10	D10	5/8	7/8-14	2.25	.97	.51	1 1/8	KC139K10	KC139D10	KC165-10
K12	D12	3/4	1-1/16-12	2.49	1.09	.58	1 3/8	KC139K12	KC139D12	KC165-12
K16	D16	1	1-5/16-12	2.74	1.19	.61	1 5/8	KC139K16	KC139D16	KC165-16
K20	D20	1 1/4	1-5/8-12	2.99	1.31	.64	1 7/8	KC139K20	KC139D20	KC165-20
K24	D24	1 1/2	1-7/8-12	3.10	1.37	.65	2 1/8	KC139K24	KC139D24	KC165-24
K28	D28	1 3/4	2-1/4-12	3.83	1.72	.89	2 1/2	KC139K28	KC139D28	KC165-28
K32	D32	2	2-1/2-12	3.97	1.78	.95	2 3/4	KC139K32	KC139D32	KC165-32

MATERIAL: SEE PROCUREMENT SPECIFICATION.
ALUMINUM ALLOY, 2024-T6, CODE "D"
CORROSION RESISTANT STEEL (CLASS 316), CODE "K"

FINISH: SEE PROCUREMENT SPECIFICATION.

SCREW THREAD: SEE PROCUREMENT SPECIFICATION.

NOTES:
1. REMOVE BURRS AND SLIVERS. BREAK SHARP EDGES UNLESS OTHERWISE NOTED.
2. DIMENSIONS IN INCHES. UNLESS OTHERWISE SPECIFIED, TOLERANCE DECIMALS ±.016.
3. FOR DESIGN FEATURE PURPOSES, THIS DRAWING TAKES PRECEDENCE OVER PROCUREMENT DOCUMENTS REFERENCED HEREIN.
4. REFERENCED DOCUMENTS SHALL BE OF THE ISSUE IN EFFECT ON THE DATE OF INVITATION FOR BID.
5. MARKING OF FITTINGS SHALL BE CONSISTENT WITH PROCUREMENT SPECIFICATION USING APPLICABLE KC STANDARD AND PART NUMBER DESIGNATIONS AS SHOWN ON THIS DRAWING.

EXAMPLE OF PART NOS.
KC171K4 = UNION ASSEMBLY, 1/4" OD TUBING, CORROSION RESISTANT STEEL
KC171D8 = UNION ASSEMBLY, 1/2" OD TUBING, ALUMINUM ALLOY

REVISED: (A) REV & REDRAWN 8-1-90

APPROVED: 11-1-83

CUSTODIAN: JOHN F. KENNEDY SPACE CENTER

PROCUREMENT SPEC. KSC-F-124

COORDINATION STATUS KSC DE

UNION ASSEMBLY, DOUBLE SWIVEL NUT

STANDARD PART

KC171

SHEET 1 OF 1

NOTICE: WHEN GOVERNMENT DRAWINGS, SPECIFICATIONS OR OTHER DATA ARE USED FOR ANY PURPOSE OTHER THAN IN CONNECTION WITH A DEFINITELY RELATED GOVERNMENT PROCUREMENT OPERATION, THE UNITED STATES GOVERNMENT THEREBY INCURS NO RESPONSIBILITY NOR ANY OBLIGATION WHATSOEVER AND THE FACT THAT THE GOVERNMENT MAY HAVE FORMULATED, FURNISHED, OR IN ANY WAY SUPPLIED THE SAID DRAWINGS, SPECIFICATIONS, OR OTHER DATA IS NOT REGARDED BY IMPLICATION OR OTHERWISE AS IN ANY MANNER LICENSING THE HOLDER OR ANY OTHER PERSON OR CORPORATION, OR CONVEYING ANY RIGHTS OR PERMISSION TO MANUFACTURE, USE, OR SELL ANY PATENTED INVENTION THAT MAY IN ANY WAY BE RELATED THERETO.

FED SUP CLASS
4730

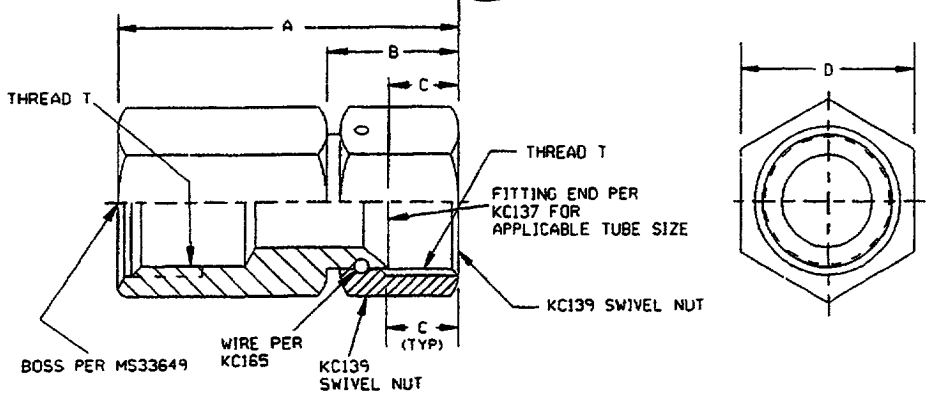

DASH NUMBER		TUBE OD REF	THREAD T REF	A +.000 -.060	B REF	C REF	D REF	SWIVEL NUT		RETAINING WIRE
CRE STEEL	AL ALLOY							FOR CRE STEEL ASSY	FOR AL ALLOY ASSY	
K4	D4	1/4	7/16-20	1.61	.73	.36	11/16	KC139K4	KC139D4	KC165-4
K6	D6	3/8	9/16-18	1.72	.85	.39	13/16	KC139K6	KC139D6	KC165-6
K8	D8	1/2	3/4-16	1.96	.90	.44	1	KC139K8	KC139D8	KC165-8
K10	D10	5/8	7/8-14	2.15	.97	.51	1 1/8	KC139K10	KC139D10	KC165-10
K12	D12	3/4	1-1/16-12	2.41	1.09	.58	1 3/8	KC139K12	KC139D12	KC165-12
K16	D16	1	1-5/16-12	2.59	1.19	.61	1 5/8	KC139K16	KC139D16	KC165-16
K20	D20	1 1/4	1-5/8-12	2.81	1.31	.64	1 7/8	KC139K20	KC139D20	KC165-20
K24	D24	1 1/2	1-7/8-12	3.06	1.37	.65	2 1/4	KC139K24	KC139D24	KC165-24
K28	D28	1 3/4	2-1/4-12	3.83	1.72	.89	2 5/8	KC139K28	KC139D28	KC165-28
K32	D32	2	2-1/2-12	3.88	1.78	.95	2 7/8	KC139K32	KC139D32	KC165-32

MATERIAL: SEE PROCUREMENT SPECIFICATION.
ALUMINUM ALLOY, 2024-T6, CODE "D"
CORROSION RESISTANT STEEL (CLASS 316), CODE "K"

FINISH: SEE PROCUREMENT SPECIFICATION.

SCREW THREAD: SEE PROCUREMENT SPECIFICATION.

NOTES:
1. REMOVE BURRS AND SLIVERS. BREAK SHARP EDGES UNLESS OTHERWISE NOTED.
2. DIMENSIONS IN INCHES. UNLESS OTHERWISE SPECIFIED, TOLERANCE DECIMALS ±.016.
3. FOR DESIGN FEATURE PURPOSES, THIS DRAWING TAKES PRECEDENCE OVER PROCUREMENT DOCUMENTS REFERENCED HEREIN.
4. REFERENCED DOCUMENTS SHALL BE OF THE ISSUE IN EFFECT ON THE DATE OF INVITATION FOR BID.
5. MARKING OF FITTINGS SHALL BE CONSISTENT WITH PROCUREMENT SPECIFICATION USING APPLICABLE KC STANDARD AND PART NUMBER DESIGNATIONS AS SHOWN ON THIS DRAWING.

EXAMPLE OF PART NOS.
KC172K4 = ADAPTER, SWIVEL NUT, 1/4" OD TUBING, CORROSION RESISTANT STEEL
KC172D8 = ADAPTER, SWIVEL NUT, 1/2" OD TUBING, ALUMINUM ALLOY

REVISED: (A) REV & REDRAWN 8-1-90

APPROVED: 11-1-83

CUSTODIAN: JOHN F. KENNEDY SPACE CENTER

PROCUREMENT SPEC.
KSC-F-124

COORDINATION STATUS
KSC DE

ADAPTER, SWIVEL NUT

STANDARD PART
KC172

SHEET 1 OF 1

FED SUP CLASS
4730

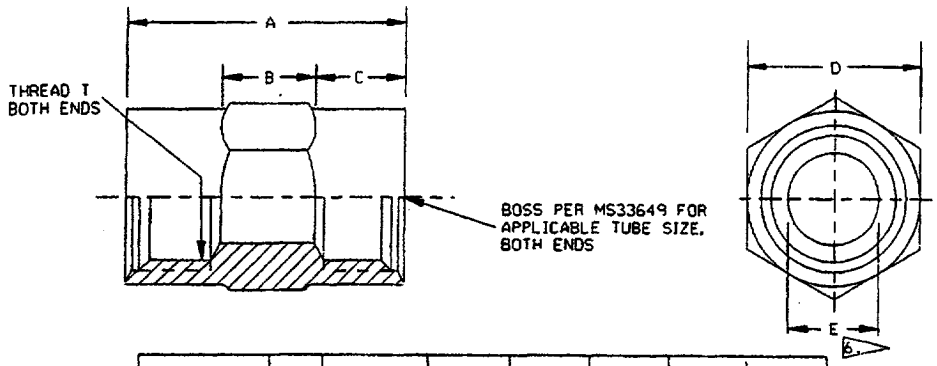

DASH NUMBER		TUBE OD REF	THREAD T REF	A +.030 -.000	B REF	C ±.010	D REF	E MIN 6.
CRE STEEL	AL ALLOY							
K4	D4	¼	7/16-20	1.188	.375	.406	.688	.168
K6	D6	⅜	9/16-18	1.188	.375	.406	.813	.293
K8	D8	½	3/4-16	1.434	.437	.500	1.000	.387
K10	D10	⅝	7/8-14	1.563	.500	.594	1.125	.480
K12	D12	¾	1-1/16-12	1.813	.625	.594	1.375	.604
K16	D16	1	1-5/16-12	1.875	.687	.594	1.625	.839
K20	D20	1¼	1-5/8-12	2.000	.750	.625	2.000	1.073
K24	D24	1½	1-7/8-12	2.250	.812	.719	2.250	1.307
K28	D28	1¾	2-1/4-12	2.500	.875	.750	2.625	1.542
K32	D32	2	2-1/2-12	2.750	1.000	.875	3.000	1.776

MATERIAL: SEE PROCUREMENT SPECIFICATION.
ALUMINUM ALLOY, 2024-T6, CODE "D"
CORROSION RESISTANT STEEL (CLASS 316), CODE "K"

FINISH: SEE PROCUREMENT SPECIFICATION.

SCREW THREAD: SEE PROCUREMENT SPECIFICATION.

NOTES:
1. REMOVE BURRS AND SLIVERS. BREAK SHARP EDGES UNLESS OTHERWISE NOTED.
2. DIMENSIONS IN INCHES. UNLESS OTHERWISE SPECIFIED, TOLERANCE DECIMALS ±.016.
3. FOR DESIGN FEATURE PURPOSES, THIS DRAWING TAKES PRECEDENCE OVER PROCUREMENT DOCUMENTS REFERENCED HEREIN.
4. REFERENCED DOCUMENTS SHALL BE OF THE ISSUE IN EFFECT ON THE DATE OF INVITATION FOR BID.
5. MARKING OF FITTINGS SHALL BE CONSISTENT WITH PROCUREMENT SPECIFICATION USING APPLICABLE KC STANDARD AND PART NUMBER DESIGNATIONS AS SHOWN ON THIS DRAWING.
6. AT THE OPTION OF THE MANUFACTURER, DRILL THRU UP TO THE MINOR DIAMETER OF THE APPLICABLE THREAD SIZE CALLED FOR BY MIL-S-8879 AND IN COMPLIANCE WITH MS33649.

EXAMPLE OF PART NOS.
KC173K4 = COUPLING, TUBE, ¼" OD TUBING, CORROSION RESISTANT STEEL
KC173D8 = COUPLING, TUBE, ½" OD TUBING, ALUMINUM ALLOY

REVISED: (A) REV & REDRAWN 8-1-90
APPROVED: 11-1-83

CUSTODIAN: JOHN F. KENNEDY SPACE CENTER		
PROCUREMENT SPEC. KSC-F-124	COUPLING, TUBE	STANDARD PART KC173
COORDINATION STATUS KSC DE		SHEET 1 OF 1

NOTICE: WHEN GOVERNMENT DRAWINGS, SPECIFICATIONS OR OTHER DATA ARE USED FOR ANY PURPOSE OTHER THAN IN CONNECTION WITH A DEFINITELY RELATED GOVERNMENT PROCUREMENT OPERATION, THE UNITED STATES GOVERNMENT THEREBY INCURS NO RESPONSIBILITY NOR ANY OBLIGATION WHATSOEVER AND THE FACT THAT THE GOVERNMENT MAY HAVE FORMULATED, FURNISHED, OR IN ANY WAY SUPPLIED THE SAID DRAWINGS, SPECIFICATIONS, OR OTHER DATA IS NOT REGARDED BY IMPLICATION OR OTHERWISE AS IN ANY MANNER LICENSING THE HOLDER OR ANY OTHER PERSON OR CORPORATION, OR CONVEYING ANY RIGHTS OR PERMISSION TO MANUFACTURE, USE, OR SELL ANY PATENTED INVENTION THAT MAY IN ANY WAY BE RELATED THERETO.

NOTICE: WHEN GOVERNMENT DRAWINGS, SPECIFICATIONS OR OTHER DATA ARE USED FOR ANY PURPOSE OTHER THAN IN CONNECTION WITH A DEFINITELY RELATED GOVERNMENT PROCUREMENT OPERATION, THE UNITED STATES GOVERNMENT THEREBY INCURS NO RESPONSIBILITY NOR ANY OBLIGATION WHATSOEVER AND THE FACT THAT THE GOVERNMENT MAY HAVE FORMULATED, FURNISHED, OR IN ANY WAY SUPPLIED THE SAID DRAWINGS, SPECIFICATIONS, OR OTHER DATA IS NOT REGARDED BY IMPLICATION OR OTHERWISE AS IN ANY MANNER LICENSING THE HOLDER OR ANY OTHER PERSON OR CORPORATION, OR CONVEYING ANY RIGHTS OR PERMISSION TO MANUFACTURE, USE, OR SELL ANY PATENTED INVENTION THAT MAY IN ANY WAY BE RELATED THERETO.

FED SUP CLASS
4730

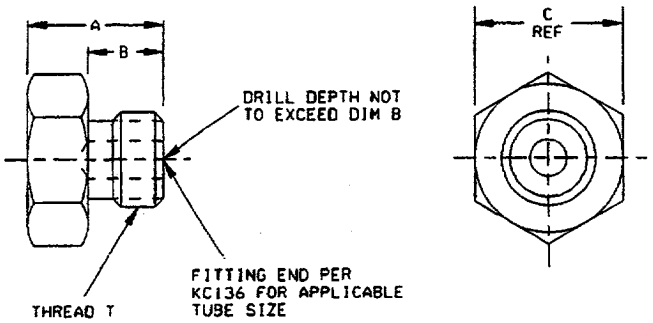

DASH NO.		TUBE OD REF	THREAD T REF	A ±.016	B REF	C REF
CRE STEEL	AL ALLOY					
K4	D4	¼	7/16-20	.67	.389	.688
K6	D6	⅜	9/16-18	.73	.420	.813
K8	D8	½	3/4-16	.80	.521	1.000
K10	D10	⅝	7/8-14	.93	.567	1.125
K12	D12	¾	1-1/16-12	1.09	.636	1.375
K16	D16	1	1-5/16-12	1.12	.672	1.625
K20	D20	1¼	1-5/8-12	1.20	.672	1.875
K24	D24	1½	1-7/8-12	1.27	.720	2.125
K28	D28	1¾	2-1/4-12	1.35	.772	2.500
K32	D32	2	2-1/2-12	1.43	.887	2.750

MATERIAL: SEE PROCUREMENT SPECIFICATION.
ALUMINUM ALLOY, 2024-T6, CODE "D"
CORROSION RESISTANT STEEL (CLASS 316), CODE "K"

FINISH: SEE PROCUREMENT SPECIFICATION.

SCREW THREAD: SEE PROCUREMENT SPECIFICATION.

NOTES:
1. REMOVE BURRS AND SLIVERS. BREAK SHARP EDGES UNLESS OTHERWISE NOTED.
2. DIMENSIONS IN INCHES. UNLESS OTHERWISE SPECIFIED, TOLERANCE DECIMALS ±.016.
3. FOR DESIGN FEATURE PURPOSES, THIS DRAWING TAKES PRECEDENCE OVER PROCUREMENT DOCUMENTS REFERENCED HEREIN.
4. REFERENCED DOCUMENTS SHALL BE OF THE ISSUE IN EFFECT ON THE DATE OF INVITATION FOR BID.
5. MARKING OF FITTINGS SHALL BE CONSISTENT WITH PROCUREMENT SPECIFICATION USING APPLICABLE KC STANDARD AND PART NUMBER DESIGNATIONS AS SHOWN ON THIS DRAWING.

EXAMPLE OF PART NOS.
KC174K8 = PLUG, ½" OD TUBING, CORROSION RESISTANT STEEL
KC174D12 = PLUG, ¾" OD TUBING, ALUMINUM ALLOY

REVISED: (B) 8-1-90 (C) 1-2-91 (D) REV A DIM FOR -12, 4-10-91

APPROVED: 11-1-83

CUSTODIAN: JOHN F. KENNEDY SPACE CENTER

PROCUREMENT SPEC.	PLUG, HEX HEAD	STANDARD PART
KSC-F-124		KC174
COORDINATION STATUS		SHEET 1 OF 1
KSC DE		

NOTICE: WHEN GOVERNMENT DRAWINGS, SPECIFICATIONS OR OTHER DATA ARE USED FOR ANY PURPOSE OTHER THAN IN CONNECTION WITH A DEFINITELY RELATED GOVERNMENT PROCUREMENT OPERATION, THE UNITED STATES GOVERNMENT THEREBY INCURS NO RESPONSIBILITY NOR ANY OBLIGATION WHATSOEVER AND THE FACT THAT THE GOVERNMENT MAY HAVE FORMULATED, FURNISHED, OR IN ANY WAY SUPPLIED THE SAID DRAWINGS, SPECIFICATIONS, OR OTHER DATA IS NOT REGARDED BY IMPLICATION OR OTHERWISE AS IN ANY MANNER LICENSING THE HOLDER OR ANY OTHER PERSON OR CORPORATION, OR CONVEYING ANY RIGHTS OR PERMISSION TO MANUFACTURE, USE, OR SELL ANY PATENTED INVENTION THAT MAY IN ANY WAY BE RELATED THERETO.

FED SUP CLASS
4730

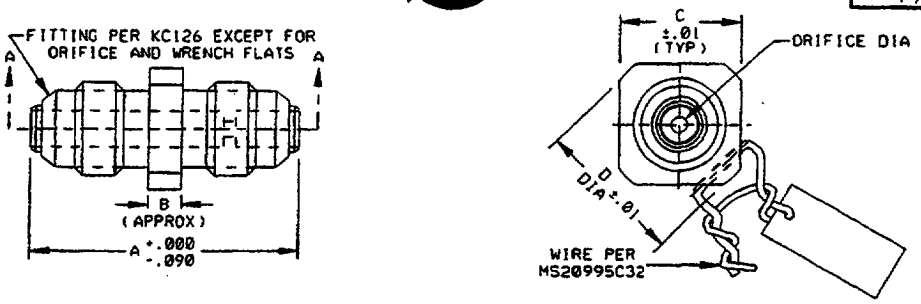

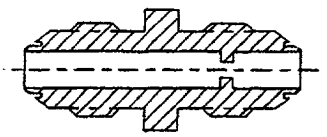

SECTION A-A

MATERIAL: SEE PROCUREMENT SPECIFICATION. CORROSION RESISTANT STEEL (CLASS 316), CODE "K".

OPERATING PRESSURE: 6600 PSIG (MAXIMUM) FOR ALL SIZES EXCEPT 6500 PSIG (MAXIMUM) FOR 1" SIZE FITTINGS.

FINISH: SEE PROCUREMENT SPECIFICATION.

SCREW THREAD: SEE PROCUREMENT SPECIFICATION.

NOTES:

1. REMOVE BURRS AND SLIVERS. BREAK SHARP EDGES UNLESS OTHERWISE NOTED.
2. DIMENSIONS IN INCHES. UNLESS OTHERWISE SPECIFIED, TOLERANCE DECIMALS ±.016.
3. FOR DESIGN FEATURE PURPOSES, THIS DRAWING TAKES PREDEDENCE OVER PROCUREMENT DOCUMENTS REFERENCED HEREIN.
4. REFERENCED DOCUMENTS SHALL BE OF THE ISSUE IN EFFECT ON THE DATE OF INVITATION FOR BID.
5. MARKING OF FITTINGS SHALL BE CONSISTANT WITH PROCUREMENT SPECIFICATION USING APPLICABLE KC STANDARD PART NUMBER DESIGNATIONS AND ORIFICE DIAMETER AS SHOWN ON THIS DRAWING AND SHALL BE LEGIBILY STAMPED OR EMBOSSED ON A STAINLESS STEEL TAG APPROXIMATELY 1" X 2" X .017". THE TAG SHALL BE LOCKWIRED TO EACH FITTING AS SHOWN.
6. CLEAN, PROTECT & INSPECT PER KSC-C-123, LEVEL 300A, TEST METHOD 1, PRIOR TO INSTALLATION IN FLUID SYSTEMS. CERTIFICATION REQUIRED.
7. THIS DRAWING SUPERCEDES KENNEDY SPACE CENTER DRAWINGS 79K80236 AND 79K80239. FITTINGS PER 79K80239 ARE EQUIVALENT TO THOSE OF KC175 AND SHALL BE USED UNTIL EXISTING SUPPLY IS DEPLETED.
8. ALL ORIFICES SHALL BE FLOW TESTED WITH NITROGEN AND CERTIFIED IN ACCORDANCE WITH FLAG NOTE 9. CERTIFICATION MUST INCLUDE FLOW RATE, TEMPERATURE, AND PRESSURE.

EXAMPLE OF PART NOS. KC175K4-.030 = ORIFICE, UNION, $\frac{1}{4}$" OD TUBING, .030" DIAMETER

APPROVED: 1-2-91 REVISED: © ADDED SUPERCEDES COLUMN TO SHTS 2 THRU 4, CHANGED NOTES 6 & 7 9-1-97

CUSTODIAN: JOHN F. KENNEDY SPACE CENTER		
PROCUREMENT SPEC. KSC-F-124	ORIFICE, UNION, FLARED TUBE FOR SEAL RING	STANDARD PART
COORDINATION STATUS KSC DE		KC175
		SHEET 1 OF 4

NOTICE: WHEN GOVERNMENT DRAWINGS, SPECIFICATIONS OR OTHER DATA ARE USED FOR ANY PURPOSE OTHER THAN IN CONNECTION WITH A DEFINITELY RELATED GOVERNMENT PROCUREMENT OPERATION, THE UNITED STATES GOVERNMENT THEREBY INCURS NO RESPONSIBILITY NOR ANY OBLIGATION WHATSOEVER AND THE FACT THAT THE GOVERNMENT MAY HAVE FORMULATED, FURNISHED, OR IN ANY WAY SUPPLIED THE SAID DRAWINGS, SPECIFICATIONS, OR OTHER DATA IS NOT REGARDED BY IMPLICATION OR OTHERWISE AS IN ANY MANNER LICENSING THE HOLDER OR ANY OTHER PERSON OR CORPORATION, OR CONVEYING ANY RIGHTS OR PERMISSION TO MANUFACTURE, USE, OR SELL ANY PATENTED INVENTION THAT MAY IN ANY WAY BE RELATED THERETO.

FED SUP CLASS
4730

9 FLOW RATES ARE CALCULATED FOR AIR OR NITROGEN BY USE OF THE EQUATION: FLOW (SCFM) = 16.5 X ORIFICE AREA (SQ. IN.) X 1000 PSIA UPSTREAM PRESSURE AT 70°F. THIS EQUATION IS LIMITED TO THE CONDITION WHERE DOWNSTREAM PRESSURE IS 53% OF UPSTREAM PRESSURE OR LESS.

TOLERANCE ON GIVEN FLOW RATES:

FOR ORIFICE DIAMETERS .0055 TO .030 TOLERANCE IS ± 20%
FOR ORIFICE DIAMETERS .031 TO .090 TOLERANCE IS ± 15%
FOR ORIFICE DIAMETERS .091 & ABOVE, TOLERANCE IS ± 10%.

TO DETERMINE FLOW RATES FOR UPSTREAM PRESSURES OTHER THAN 1000 PSIA, MULTIPLY GIVEN FLOW RATES BY:

$$\frac{\text{NEW UPSTREAM PRESSURE PSIA}}{1000\ \text{PSIA}}$$

GIVEN FLOW RATES ARE WITHIN TOLERANCE OVER AN UPSTREAM TEMPERATURE SPAN OF ± 30°F. TO DETERMINE FLOW RATES FOR TEMPERATURES OTHER THAN 70°F, MULTIPLY GIVEN FLOW RATES BY:

$$\sqrt{\frac{530}{460 + \text{NEW TEMP °F}}}$$

TO OBTAIN FLOW RATES FOR : HELIUM - MULTIPLY GIVEN FLOW RATE BY 2.69
HYDROGEN - MULTIPLY GIVEN FLOW RATE BY 3.8
OXYGEN - MULTIPLY GIVEN FLOW RATE BY 0.95

DASH NO. / CRE STEEL	TUBE OD REF	FLOW RATE SCFM 9	A DIM	B DIM	C DIM	D DIM	SUPERCEDES P/N
K4	¼	BLANK	1.265	.16	.68	.81	79K80236-1, 79K80239-1
K4-.0055	¼	.39	1.265	.16	.68	.81	79K80236-2, 79K80239-2
K4-.006	¼	.46	1.265	.16	.68	.81	79K80236-3, 79K80239-3
K4-.007	¼	.63	1.265	.16	.68	.81	79K80236-4, 79K80239-4
K4-.008	¼	.83	1.265	.16	.68	.81	79K80236-5, 79K80239-5
K4-.009	¼	1.05	1.265	.16	.68	.81	79K80236-6, 79K80239-6
K4-.010	¼	1.30	1.265	.16	.68	.81	79K80236-7, 79K80239-7
K4-.0125	¼	2.02	1.265	.16	.68	.81	79K80236-8, 79K80239-8
K4-.015	¼	2.92	1.265	.16	.68	.81	79K80236-9, 79K80239-9
K4-.0175	¼	3.97	1.265	.16	.68	.81	79K80236-10, 79K80239-10
K4-.020	¼	5.18	1.265	.16	.68	.81	79K80236-11, 79K80239-11
K4-.025	¼	8.10	1.265	.16	.68	.81	79K80236-12, 79K80239-12
K4-.030	¼	11.66	1.265	.16	.68	.81	79K80236-13, 79K80239-13
K4-.035	¼	15.87	1.265	.16	.68	.81	79K80236-14, 79K80239-14
K4-.040	¼	20.73	1.265	.16	.68	.81	79K80236-15, 79K80239-15
K4-.045	¼	26.24	1.265	.16	.68	.81	79K80236-16, 79K80239-16
K4-.050	¼	32.40	1.265	.16	.68	.81	79K80236-17, 79K80239-17
K4-.055	¼	39.20	1.265	.16	.68	.81	79K80236-18, 79K80239-18
K4-.060	¼	46.65	1.265	.16	.68	.81	79K80236-19, 79K80239-19
K4-.065	¼	54.75	1.265	.16	.68	.81	79K80236-20, 79K80239-20
K4-.070	¼	63.50	1.265	.16	.68	.81	79K80236-21, 79K80239-21
K4-.075	¼	72.89	1.265	.16	.68	.81	79K80236-22, 79K80239-22
K4-.080	¼	82.94	1.265	.16	.68	.81	79K80236-23, 79K80239-23

APPROVED: 11-16-92 REVISED: © ADDED SUPERCEDES COLUMN, 9-1-97

CUSTODIAN: JOHN F. KENNEDY SPACE CENTER

PROCUREMENT SPEC. KSC-F-124

COORDINATION STATUS KSC DE

ORIFICE, UNION, FLARED TUBE FOR SEAL RING

STANDARD PART KC175

SHEET 2 OF 4

FED SUP CLASS
4730

DASH NO. CRE STEEL	TUBE OD REF	FLOW RATE SCFM 9	A DIM	B DIM	C DIM	D DIM	SUPERCEDES P/N
K4-.085	¼	93.63	1.265	.16	.68	.81	79K80236-24, 79K80239-24
K4-.090	¼	105	1.265	.16	.68	.81	79K80236-25, 79K80239-25
K4-.095	¼	117	1.265	.16	.68	.81	79K80236-26, 79K80239-26
K6	⅜	BLANK	1.390	.27	.81	.93	79K80236-32, 79K80239-32
K6-.010	⅜	1.30	1.390	.27	.81	.93	79K80236-33, 79K80239-33
K6-.018	⅜	4.20	1.390	.27	.81	.93	79K80236-34, 79K80239-34
K6-.026	⅜	8.76	1.390	.27	.81	.93	79K80236-35, 79K80239-35
K6-.034	⅜	14.98	1.390	.27	.81	.93	79K80236-36, 79K80239-36
K6-.042	⅜	22.86	1.390	.27	.81	.93	79K80236-37, 79K80239-37
K6-.050	⅜	32.40	1.390	.27	.81	.93	79K80236-38, 79K80239-38
K6-.058	⅜	43.59	1.390	.27	.81	.93	79K80236-39, 79K80239-39
K6-.066	⅜	56.45	1.390	.27	.81	.93	79K80236-40, 79K80239-40
K6-.074	⅜	70.96	1.390	.27	.81	.93	79K80236-41, 79K80239-41
K6-.082	⅜	87.14	1.390	.27	.81	.93	79K80236-42, 79K80239-42
K6-.090	⅜	105	1.390	.27	.81	.93	79K80236-43, 79K80239-43
K6-.098	⅜	124	1.390	.27	.81	.93	79K80236-44, 79K80239-44
K6-.106	⅜	146	1.390	.27	.81	.93	79K80236-45, 79K80239-45
K6-.114	⅜	168	1.390	.27	.81	.93	79K80236-46, 79K80239-46
K6-.122	⅜	193	1.390	.27	.81	.93	79K80236-47, 79K80239-47
K6-.130	⅜	219	1.390	.27	.81	.93	79K80236-48, 79K80239-48
K6-.138	⅜	249	1.390	.27	.81	.93	79K80236-49, 79K80239-49
K6-.146	⅜	276	1.390	.27	.81	.93	79K80236-50, 79K80239-50
K6-.154	⅜	307	1.390	.27	.81	.93	79K80236-51, 79K80239-51
K6-.162	⅜	340	1.390	.27	.81	.93	79K80236-52, 79K80239-52
K6-.170	⅜	375	1.390	.27	.81	.93	79K80236-53, 79K80239-53
K6-.178	⅜	411	1.390	.27	.81	.93	79K80236-54, 79K80239-54
K6-.186	⅜	448	1.390	.27	.81	.93	79K80236-55, 79K80239-55
K6-.188	⅜	458	1.390	.27	.81	.93	79K80236-56, 79K80239-56
K8	½	BLANK	1.578	.26	1.00	1.12	79K80236-62, 79K80239-62
K8-.010	½	1.30	1.578	.26	1.00	1.12	79K80236-63, 79K80239-63
K8-.020	½	5.18	1.578	.26	1.00	1.12	79K80236-64, 79K80239-64
K8-.030	½	11.66	1.578	.26	1.00	1.12	79K80236-65, 79K80239-65
K8-.040	½	20.73	1.578	.26	1.00	1.12	79K80236-66, 79K80239-66
K8-.050	½	32.40	1.578	.26	1.00	1.12	79K80236-67, 79K80239-67
K8-.060	½	46.65	1.578	.26	1.00	1.12	79K80236-68, 79K80239-68
K8-.070	½	63.50	1.578	.26	1.00	1.12	79K80236-69, 79K80239-69
K8-.080	½	82.94	1.578	.26	1.00	1.12	79K80236-70, 79K80239-70
K8-.090	½	105	1.578	.26	1.00	1.12	79K80236-71, 79K80239-71

APPROVED: 11-16-92 REVISED: © ADDED SUPERCEDES COLUMN. 9-1-97

CUSTODIAN: JOHN F. KENNEDY SPACE CENTER

PROCUREMENT SPEC. KSC-F-124

COORDINATION STATUS KSC DE

ORIFICE, UNION, FLARED TUBE FOR SEAL RING

STANDARD PART

KC175

SHEET 3 OF 4

NOTICE: WHEN GOVERNMENT DRAWINGS, SPECIFICATIONS OR OTHER DATA ARE USED FOR ANY PURPOSE OTHER THAN IN CONNECTION WITH A DEFINITELY RELATED GOVERNMENT PROCUREMENT OPERATION, THE UNITED STATES GOVERNMENT THEREBY INCURS NO RESPONSIBILITY NOR ANY OBLIGATION WHATSOEVER AND THE FACT THAT THE GOVERNMENT MAY HAVE FORMULATED, FURNISHED, OR IN ANY WAY SUPPLIED THE SAID DRAWINGS, SPECIFICATIONS, OR OTHER DATA IS NOT REGARDED BY IMPLICATION OR OTHERWISE AS IN ANY MANNER LICENSING THE HOLDER OR ANY OTHER PERSON OR CORPORATION, OR CONVEYING ANY RIGHTS OR PERMISSION TO MANUFACTURE, USE, OR SELL ANY PATENTED INVENTION THAT MAY IN ANY WAY BE RELATED THERETO.

FED SUP CLASS
4730

DASH NO. CRE STEEL	TUBE OD REF	FLOW RATE SCFM	A DIM	B DIM	C DIM	D DIM	SUPERCEDES P/N
K8-.100	½	130	1.578	.26	1.00	1.12	79K80236-72, 79K80239-72
K8-.110	½	157	1.578	.26	1.00	1.12	79K80236-73, 79K80239-73
K8-.120	½	187	1.578	.26	1.00	1.12	79K80236-74, 79K80239-74
K8-.130	½	219	1.578	.26	1.00	1.12	79K80236-75, 79K80239-75
K8-.140	½	254	1.578	.26	1.00	1.12	79K80236-76, 79K80239-76
K8-.150	½	292	1.578	.26	1.00	1.12	79K80236-77, 79K80239-77
K8-.160	½	332	1.578	.26	1.00	1.12	79K80236-78, 79K80239-78
K8-.170	½	375	1.578	.26	1.00	1.12	79K80236-79, 79K80239-79
K8-.180	½	420	1.578	.26	1.00	1.12	79K80236-80, 79K80239-80
K8-.190	½	468	1.578	.26	1.00	1.12	79K80236-81, 79K80239-81
K8-.200	½	518	1.578	.26	1.00	1.12	79K80236-82, 79K80239-82
K8-.210	½	571	1.578	.26	1.00	1.12	79K80236-83, 79K80239-83
K8-.220	½	627	1.578	.26	1.00	1.12	79K80236-84, 79K80239-84
K8-.230	½	686	1.578	.26	1.00	1.12	79K80236-85, 79K80239-85
K8-.240	½	746	1.578	.26	1.00	1.12	79K80236-86, 79K80239-86
K8-.250	½	810	1.578	.26	1.00	1.12	79K80236-87, 79K80239-87
K12	¾	BLANK	2.125	.39	1.37	1.56	79K80236-93, 79K80239-93
K12-.100	¾	130	2.125	.39	1.37	1.56	79K80236-94, 79K80239-94
K12-.120	¾	187	2.125	.39	1.37	1.56	79K80236-95, 79K80239-95
K12-.140	¾	254	2.125	.39	1.37	1.56	79K80236-96, 79K80239-96
K12-.160	¾	332	2.125	.39	1.37	1.56	79K80236-97, 79K80239-97
K12-.180	¾	420	2.125	.39	1.37	1.56	79K80236-98, 79K80239-98
K12-.200	¾	518	2.125	.39	1.37	1.56	79K80236-99, 79K80239-99
K12-.220	¾	627	2.125	.39	1.37	1.56	79K80236-100, 79K80239-100
K12-.240	¾	746	2.125	.39	1.37	1.56	79K80236-101, 79K80239-101
K12-.260	¾	874	2.125	.39	1.37	1.56	79K80236-102, 79K80239-102
K12-.280	¾	1014	2.125	.39	1.37	1.56	79K80236-103, 79K80239-103
K12-.300	¾	1164	2.125	.39	1.37	1.56	79K80236-104, 79K80239-104
K16	1	BLANK	2.203	.38	1.62	1.87	79K80236-110, 79K80239-110
K16-.100	1	130	2.203	.38	1.62	1.87	79K80236-111, 79K80239-111
K16-.140	1	254	2.203	.38	1.62	1.87	79K80236-112, 79K80239-112
K16-.180	1	420	2.203	.38	1.62	1.87	79K80236-113, 79K80239-113
K16-.220	1	627	2.203	.38	1.62	1.87	79K80236-114, 79K80239-114
K16-.260	1	874	2.203	.38	1.62	1.87	79K80236-115, 79K80239-115
K16-.300	1	1164	2.203	.38	1.62	1.87	79K80236-116, 79K80239-116
K16-.340	1	1495	2.203	.38	1.62	1.87	79K80236-117, 79K80239-117
K16-.380	1	1868	2.203	.38	1.62	1.87	79K80236-118, 79K80239-118
K16-.420	1	2282	2.203	.38	1.62	1.87	79K80236-119, 79K80239-119

APPROVED: 11-16-92 REVISED: (C) ADDED SUPERCEDES COLUMN. 9-1-97

CUSTODIAN: JOHN F. KENNEDY SPACE CENTER

PROCUREMENT SPEC. KSC-F-124

COORDINATION STATUS KSC DE

ORIFICE, UNION, FLARED TUBE FOR SEAL RING

STANDARD PART

KC175

SHEET 4 OF 4

NOTICE: WHEN GOVERNMENT DRAWINGS, SPECIFICATIONS OR OTHER DATA ARE USED FOR ANY PURPOSE OTHER THAN IN CONNECTION WITH A DEFINITELY RELATED GOVERNMENT PROCUREMENT OPERATION, THE UNITED STATES GOVERNMENT THEREBY INCURS NO RESPONSIBILITY NOR ANY OBLIGATION WHATSOEVER AND THE FACT THAT THE GOVERNMENT MAY HAVE FORMULATED, FURNISHED, OR IN ANY WAY SUPPLIED THE SAID DRAWINGS, SPECIFICATIONS, OR OTHER DATA IS NOT REGARDED BY IMPLICATION OR OTHERWISE AS IN ANY MANNER LICENSING THE HOLDER OR ANY OTHER PERSON OR CORPORATION, OR CONVEYING ANY RIGHTS OR PERMISSION TO MANUFACTURE, USE, OR SELL ANY PATENTED INVENTION THAT MAY IN ANY WAY BE RELATED THERETO.

NOTICE: WHEN GOVERNMENT DRAWINGS, SPECIFICATIONS OR OTHER DATA ARE USED FOR ANY PURPOSE OTHER THAN IN CONNECTION WITH A DEFINITELY RELATED GOVERNMENT PROCUREMENT OPERATION, THE UNITED STATES GOVERNMENT THEREBY INCURS NO RESPONSIBILITY NOR ANY OBLIGATION WHATSOEVER AND THE FACT THAT THE GOVERNMENT MAY HAVE FORMULATED, FURNISHED, OR IN ANY WAY SUPPLIED THE SAID DRAWINGS, SPECIFICATIONS, OR OTHER DATA IS NOT REGARDED BY IMPLICATION OR OTHERWISE AS IN ANY MANNER LICENSING THE HOLDER OR ANY OTHER PERSON OR CORPORATION, OR CONVEYING ANY RIGHTS OR PERMISSION TO MANUFACTURE, USE, OR SELL ANY PATENTED INVENTION THAT MAY IN ANY WAY BE RELATED THERETO.

FED SUP CLASS 4730

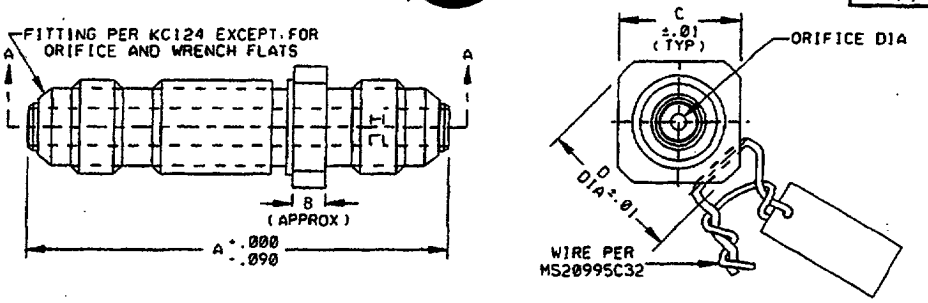

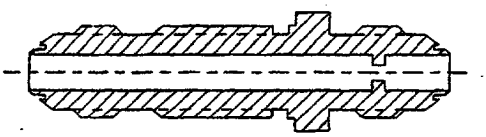

SECTION A-A

MATERIAL: SEE PROCUREMENT SPECIFICATION. CORROSION RESISTANT STEEL (CLASS 316), CODE "X".

OPERATING PRESSURE: 6600 PSIG (MAXIMUM) FOR ALL SIZES EXCEPT 6500 PSIG (MAXIMUM) FOR 1" SIZE FITTINGS.

FINISH: SEE PROCUREMENT SPECIFICATION.

SCREW THREAD: SEE PROCUREMENT SPECIFICATION.

NOTES:

1. REMOVE BURRS AND SLIVERS. BREAK SHARP EDGES UNLESS OTHERWISE NOTED.
2. DIMENSIONS IN INCHES. UNLESS OTHERWISE SPECIFIED, TOLERANCE DECIMALS ±.016.
3. FOR DESIGN FEATURE PURPOSES, THIS DRAWING TAKES PREDEDENCE OVER PROCUREMENT DOCUMENTS REFERENCED HEREIN.
4. REFERENCED DOCUMENTS SHALL BE OF THE ISSUE IN EFFECT ON THE DATE OF INVITATION FOR BID.
5. MARKING OF FITTINGS SHALL BE CONSISTANT WITH PROCUREMENT SPECIFICATION USING APPLICABLE KC STANDARD PART NUMBER DESIGNATIONS AND ORIFICE DIAMETER AS SHOWN ON THIS DRAWING AND SHALL BE LEGIBILY STAMPED OR EMBOSSED ON A STAINLESS STEEL TAG APPROXIMATELY 1" X 2" X .017". THE TAG SHALL BE LOCKWIRED TO EACH FITTING AS SHOWN.
6. CLEAN, PROTECT & INSPECT PER KSC-C-123, LEVEL 300A, TEST METHOD 1, PRIOR TO INSTALLATION IN FLUID SYSTEMS. CERTIFICATION REQUIRED.
7. THIS DRAWING SUPERCEDES KENNEDY SPACE CENTER DRAWINGS 79K80237 AND 79K80240. FITTINGS PER 79K80237 AND 79K80240 ARE EQUIVALENT TO THOSE OF KC176 AND SHALL BE USED UNTIL EXISTING SUPPLY IS DEPLETED.
8. ALL ORIFICES SHALL BE FLOW TESTED WITH NITROGEN AND CERTIFIED IN ACCORDANCE WITH FLAG NOTE 9. CERTIFICATION MUST INCLUDE FLOW RATE, TEMPERATURE, AND PRESSURE.

EXAMPLE OF PART NOS. KC176K4-.030 = ORIFICE, UNION, BLKHD, $\frac{1}{4}$" OD TUBING, .030" DIAMETER

APPROVED: 11-16-92 REVISED: (B) ADDED SUPERCEDES COLUMN TO SHTS 2 THRU 4, CHANGED NOTES 6 & 7, 9-1-97

CUSTODIAN: JOHN F. KENNEDY SPACE CENTER		
PROCUREMENT SPEC. KSC-F-124	ORIFICE, UNION, BLKHD, FLARED TUBE FOR SEAL RING	STANDARD PART
COORDINATION STATUS KSC DE		KC176
		SHEET 1 OF 4

FED SUP CLASS
4730

9 FLOW RATES ARE CALCULATED FOR AIR OR NITROGEN BY USE OF THE EQUATION: FLOW (SCFM) = 16.5 X ORIFICE AREA (SQ. IN.) X 1000 PSIA UPSTREAM PRESSURE AT 70°F. THIS EQUATION IS LIMITED TO THE CONDITION WHERE DOWNSTREAM PRESSURE IS 53% OF UPSTREAM PRESSURE OR LESS.

TOLERANCE ON GIVEN FLOW RATES:

FOR ORIFICE DIAMETERS .0055 TO .030 TOLERANCE IS ± 20%
FOR ORIFICE DIAMETERS .031 TO .090 TOLERANCE IS ± 15%
FOR ORIFICE DIAMETERS .091 & ABOVE, TOLERANCE IS ± 10%.

TO DETERMINE FLOW RATES FOR UPSTREAM PRESSURES OTHER THAN 1000 PSIA, MULTIPLY GIVEN FLOW RATES BY:

$$\frac{\text{NEW UPSTREAM PRESSURE PSIA}}{1000\ \text{PSIA}}$$

GIVEN FLOW RATES ARE WITHIN TOLERANCE OVER AN UPSTREAM TEMPERATURE SPAN OF ± 30°F. TO DETERMINE FLOW RATES FOR TEMPERATURES OTHER THAN 70°F, MULTIPLY GIVEN FLOW RATES BY:

$$\sqrt{\frac{530}{460 + \text{NEW TEMP °F}}}$$

TO OBTAIN FLOW RATES FOR : HELIUM - MULTIPLY GIVEN FLOW RATE BY 2.69
HYDROGEN - MULTIPLY GIVEN FLOW RATE BY 3.8
OXYGEN - MULTIPLY GIVEN FLOW RATE BY 0.95

DASH NO. CRE STEEL	TUBE OD REF	FLOW RATE SCFM 9	A DIM	B DIM	C DIM	D DIM	SUPERCEDES P/N
K4	¼	BLANK	2.062	.16	.68	.81	79K80237-1, 79K80240-1
K4-.0055	¼	.39	2.062	.16	.68	.81	79K80237-2, 79K80240-2
K4-.006	¼	.46	2.062	.16	.68	.81	79K80237-3, 79K80240-3
K4-.007	¼	.63	2.062	.16	.68	.81	79K80237-4, 79K80240-4
K4-.008	¼	.83	2.062	.16	.68	.81	79K80237-5, 79K80240-5
K4-.009	¼	1.05	2.062	.16	.68	.81	79K80237-6, 79K80240-6
K4-.010	¼	1.30	2.062	.16	.68	.81	79K80237-7, 79K80240-7
K4-.0125	¼	2.02	2.062	.16	.68	.81	79K80237-8, 79K80240-8
K4-.015	¼	2.92	2.062	.16	.68	.81	79K80237-9, 79K80240-9
K4-.0175	¼	3.97	2.062	.16	.68	.81	79K80237-10, 79K80240-10
K4-.020	¼	5.18	2.062	.16	.68	.81	79K80237-11, 79K80240-11
K4-.025	¼	8.10	2.062	.16	.68	.81	79K80237-12, 79K80240-12
K4-.030	¼	11.66	2.062	.16	.68	.81	79K80237-13, 79K80240-13
K4-.035	¼	15.87	2.062	.16	.68	.81	79K80237-14, 79K80240-14
K4-.040	¼	20.73	2.062	.16	.68	.81	79K80237-15, 79K80240-15
K4-.045	¼	26.24	2.062	.16	.68	.81	79K80237-16, 79K80240-16
K4-.050	¼	32.40	2.062	.16	.68	.81	79K80237-17, 79K80240-17
K4-.055	¼	39.20	2.062	.16	.68	.81	79K80237-18, 79K80240-18
K4-.060	¼	46.65	2.062	.16	.68	.81	79K80237-19, 79K80240-19
K4-.065	¼	54.75	2.062	.16	.68	.81	79K80237-20, 79K80240-20
K4-.070	¼	63.50	2.062	.16	.68	.81	79K80237-21, 79K80240-21
K4-.075	¼	72.89	2.062	.16	.68	.81	79K80237-22, 79K80240-22
K4-.080	¼	82.94	2.062	.16	.68	.81	79K80237-23, 79K80240-23

REVISED: (8) ADDED SUPERCEDES COLUMN, 9-1-97

APPROVED: 11-16-92

CUSTODIAN: JOHN F. KENNEDY SPACE CENTER

PROCUREMENT SPEC. KSC-F-124

COORDINATION STATUS KSC DE

ORIFICE, UNION, BLKHD
FLARED TUBE FOR SEAL RING

STANDARD PART
KC176

SHEET 2 OF 4

NOTICE: WHEN GOVERNMENT DRAWINGS, SPECIFICATIONS OR OTHER DATA ARE USED FOR ANY PURPOSE OTHER THAN IN CONNECTION WITH A DEFINITELY RELATED GOVERNMENT PROCUREMENT OPERATION, THE UNITED STATES GOVERNMENT THEREBY INCURS NO RESPONSIBILITY NOR ANY OBLIGATION WHATSOEVER AND THE FACT THAT THE GOVERNMENT MAY HAVE FORMULATED, FURNISHED, OR IN ANY WAY SUPPLIED THE SAID DRAWINGS, SPECIFICATIONS, OR OTHER DATA IS NOT REGARDED BY IMPLICATION OR OTHERWISE AS IN ANY MANNER LICENSING THE HOLDER OR ANY OTHER PERSON OR CORPORATION, OR CONVEYING ANY RIGHTS OR PERMISSION TO MANUFACTURE, USE, OR SELL ANY PATENTED INVENTION THAT MAY IN ANY WAY BE RELATED THERETO.

FED SUP CLASS
4730

DASH NO. CRE STEEL	TUBE OD REF	FLOW RATE SCFM	A DIM	B DIM	C DIM	D DIM	SUPERCEDES P/N
K4-.085	¼	93.63	2.062	.16	.68	.81	79K80237-24, 79K80240-24
K4-.090	¼	105	2.062	.16	.68	.81	79K80237-25, 79K80240-25
K4-.095	¼	117	2.062	.16	.68	.81	79K80237-26, 79K80240-26
K6	⅜	BLANK	2.234	.27	.81	.93	79K80237-32, 79K80240-32
K6-.010	⅜	1.30	2.234	.27	.81	.93	79K80237-33, 79K80240-33
K6-.018	⅜	4.20	2.234	.27	.81	.93	79K80237-34, 79K80240-34
K6-.026	⅜	8.76	2.234	.27	.81	.93	79K80237-35, 79K80240-35
K6-.034	⅜	14.98	2.234	.27	.81	.93	79K80237-36, 79K80240-36
K6-.042	⅜	22.86	2.234	.27	.81	.93	79K80237-37, 79K80240-37
K6-.050	⅜	32.40	2.234	.27	.81	.93	79K80237-38, 79K80240-38
K6-.058	⅜	43.59	2.234	.27	.81	.93	79K80237-39, 79K80240-39
K6-.066	⅜	56.45	2.234	.27	.81	.93	79K80237-40, 79K80240-40
K6-.074	⅜	70.96	2.234	.27	.81	.93	79K80237-41, 79K80240-41
K6-.082	⅜	87.14	2.234	.27	.81	.93	79K80237-42, 79K80240-42
K6-.090	⅜	105	2.234	.27	.81	.93	79K80237-43, 79K80240-43
K6-.098	⅜	124	2.234	.27	.81	.93	79K80237-44, 79K80240-44
K6-.106	⅜	146	2.234	.27	.81	.93	79K80237-45, 79K80240-45
K6-.114	⅜	168	2.234	.27	.81	.93	79K80237-46, 79K80240-46
K6-.122	⅜	193	2.234	.27	.81	.93	79K80237-47, 79K80240-47
K6-.130	⅜	219	2.234	.27	.81	.93	79K80237-48, 79K80240-48
K6-.138	⅜	249	2.234	.27	.81	.93	79K80237-49, 79K80240-49
K6-.146	⅜	276	2.234	.27	.81	.93	79K80237-50, 79K80240-50
K6-.154	⅜	307	2.234	.27	.81	.93	79K80237-51, 79K80240-51
K6-.162	⅜	340	2.234	.27	.81	.93	79K80237-52, 79K80240-52
K6-.170	⅜	375	2.234	.27	.81	.93	79K80237-53, 79K80240-53
K6-.178	⅜	411	2.234	.27	.81	.93	79K80237-54, 79K80240-54
K6-.186	⅜	448	2.234	.27	.81	.93	79K80237-55, 79K80240-55
K6-.188	⅜	458	2.234	.27	.81	.93	79K80237-56, 79K80240-56
K8	½	BLANK	2.468	.26	1.00	1.12	79K80237-62, 79K80240-62
K8-.010	½	1.30	2.468	.26	1.00	1.12	79K80237-63, 79K80240-63
K8-.020	½	5.18	2.468	.26	1.00	1.12	79K80237-64, 79K80240-64
K8-.030	½	11.66	2.468	.26	1.00	1.12	79K80237-65, 79K80240-65
K8-.040	½	20.73	2.468	.26	1.00	1.12	79K80237-66, 79K80240-66
K8-.050	½	32.40	2.468	.26	1.00	1.12	79K80237-67, 79K80240-67
K8-.060	½	46.65	2.468	.26	1.00	1.12	79K80237-68, 79K80240-68
K8-.070	½	63.50	2.468	.26	1.00	1.12	79K80237-69, 79K80240-69
K8-.080	½	82.94	2.468	.26	1.00	1.12	79K80237-70, 79K80240-70
K8-.090	½	105	2.468	.26	1.00	1.12	79K80237-71, 79K80240-71

REVISED: (B) ADDED SUPERCEDES COLUMN. 9-1-97

APPROVED: 11-16-92

CUSTODIAN: JOHN F. KENNEDY SPACE CENTER

PROCUREMENT SPEC. KSC-F-124

COORDINATION STATUS KSC DE

ORIFICE, UNION, BLKHD
FLARED TUBE FOR SEAL RING

STANDARD PART

KC176

SHEET 3 OF 4

NOTICE: WHEN GOVERNMENT DRAWINGS, SPECIFICATIONS OR OTHER DATA ARE USED FOR ANY PURPOSE OTHER THAN IN CONNECTION WITH A DEFINITELY RELATED GOVERNMENT PROCUREMENT OPERATION, THE UNITED STATES GOVERNMENT THEREBY INCURS NO RESPONSIBILITY NOR ANY OBLIGATION WHATSOEVER AND THE FACT THAT THE GOVERNMENT MAY HAVE FORMULATED, FURNISHED, OR IN ANY WAY SUPPLIED THE SAID DRAWINGS, SPECIFICATIONS, OR OTHER DATA IS NOT REGARDED BY IMPLICATION OR OTHERWISE AS IN ANY MANNER LICENSING THE HOLDER OR ANY OTHER PERSON OR CORPORATION, OR CONVEYING ANY RIGHTS OR PERMISSION TO MANUFACTURE, USE, OR SELL ANY PATENTED INVENTION THAT MAY IN ANY WAY BE RELATED THERETO.

FED SUP CLASS
4730

DASH NO. CRE STEEL	TUBE OD REF	FLOW RATE SCFM	A DIM	B DIM	C DIM	D DIM	SUPERCEDES P/N
K8-.100	½	130	2.468	.26	1.00	1.12	79K80237-72, 79K80240-72
K8-.110	½	157	2.468	.26	1.00	1.12	79K80237-73, 79K80240-73
K8-.120	½	187	2.468	.26	1.00	1.12	79K80237-74, 79K80240-74
K6-.130	½	219	2.468	.26	1.00	1.12	79K80237-75, 79K80240-75
K8-.140	½	254	2.468	.26	1.00	1.12	79K80237-76, 79K80240-76
K8-.150	½	292	2.468	.26	1.00	1.12	79K80237-77, 79K80240-77
K8-.160	½	332	2.468	.26	1.00	1.12	79K80237-78, 79K80240-78
K8-.170	½	375	2.468	.26	1.00	1.12	79K80237-79, 79K80240-79
K8-.180	½	420	2.468	.26	1.00	1.12	79K80237-80, 79K80240-80
K8-.190	½	468	2.468	.26	1.00	1.12	79K80237-81, 79K80240-81
K8-.200	½	518	2.468	.26	1.00	1.12	79K80237-82, 79K80240-82
K8-.210	½	571	2.468	.26	1.00	1.12	79K80237-83, 79K80240-83
K8-.220	½	627	2.468	.26	1.00	1.12	79K80237-84, 79K80240-84
K8-.230	½	686	2.468	.26	1.00	1.12	79K80237-85, 79K80240-85
K8-.240	½	746	2.468	.26	1.00	1.12	79K80237-86, 79K80240-86
K8-.250	½	810	2.468	.26	1.00	1.12	79K80237-87, 79K80240-87
K12	¾	BLANK	3.046	.39	1.37	1.56	79K80237-93, 79K80240-93
K12-.100	¾	130	3.046	.39	1.37	1.56	79K80237-94, 79K80240-94
K12-.120	¾	187	3.046	.39	1.37	1.56	79K80237-95, 79K80240-95
K12-.140	¾	254	3.046	.39	1.37	1.56	79K80237-96, 79K80240-96
K12-.160	¾	332	3.046	.39	1.37	1.56	79K80237-97, 79K80240-97
K12-.180	¾	420	3.046	.39	1.37	1.56	79K80237-98, 79K80240-98
K12-.200	¾	518	3.046	.39	1.37	1.56	79K80237-99, 79K80240-99
K12-.220	¾	627	3.046	.39	1.37	1.56	79K80237-100, 79K80240-100
K12-.240	¾	746	3.046	.39	1.37	1.56	79K80237-101, 79K80240-101
K12-.260	¾	874	3.046	.39	1.37	1.56	79K80237-102, 79K80240-102
K12-.280	¾	1014	3.046	.39	1.37	1.56	79K80237-103, 79K80240-103
K12-.300	¾	1164	3.046	.39	1.37	1.56	79K80237-104, 79K80240-104
K16	1	BLANK	3.093	.38	1.62	1.87	79K80237-110, 79K80240-110
K16-.100	1	130	3.093	.38	1.62	1.87	79K80237-111, 79K80240-111
K16-.140	1	254	3.093	.38	1.62	1.87	79K80237-112, 79K80240-112
K16-.180	1	420	3.093	.38	1.62	1.87	79K80237-113, 79K80240-113
K16-.220	1	627	3.093	.38	1.62	1.87	79K80237-114, 79K80240-114
K16-.260	1	874	3.093	.38	1.62	1.87	79K80237-115, 79K80240-115
K16-.300	1	1164	3.093	.38	1.62	1.87	79K80237-116, 79K80240-116
K16-.340	1	1495	3.093	.38	1.62	1.87	79K80237-117, 79K80240-117
K16-.380	1	1868	3.093	.38	1.62	1.87	79K80237-118, 79K80240-118
K16-.420	1	2282	3.093	.38	1.62	1.87	79K80237-119, 79K80240-119

REVISED: (8) ADDED SUPERCEDES COLUMN, 9-1-97

APPROVED: 11-16-92

CUSTODIAN: JOHN F. KENNEDY SPACE CENTER

PROCUREMENT SPEC. KSC-F-124

COORDINATION STATUS KSC OE

ORIFICE, UNION, BLKHD
FLARED TUBE FOR SEAL RING

STANDARD PART

KC176

SHEET 4 OF 4

NOTICE: WHEN GOVERNMENT DRAWINGS, SPECIFICATIONS OR OTHER DATA ARE USED FOR ANY PURPOSE OTHER THAN IN CONNECTION WITH A DEFINITELY RELATED GOVERNMENT PROCUREMENT OPERATION, THE UNITED STATES GOVERNMENT THEREBY INCURS NO RESPONSIBILITY NOR ANY OBLIGATION WHATSOEVER AND THE FACT THAT THE GOVERNMENT MAY HAVE FORMULATED, FURNISHED, OR IN ANY WAY SUPPLIED THE SAID DRAWINGS, SPECIFICATIONS, OR OTHER DATA IS NOT REGARDED BY IMPLICATION OR OTHERWISE AS IN ANY MANNER LICENSING THE HOLDER OR ANY OTHER PERSON OR CORPORATION, OR CONVEYING ANY RIGHTS OR PERMISSION TO MANUFACTURE, USE, OR SELL ANY PATENTED INVENTION THAT MAY IN ANY WAY BE RELATED THERETO.

APPENDIX

APPENDIX A:
KC-152 Fitting Dimensional Change Justification

Background
Allan Aircraft discovered a problem with the dimensions of the KC-152 reducer fittings while attempting to manufacture them and informed NASA Fluid Design, NE-F2. The KC-152 drawing has various reducers ranging in size from 1/4" to 2" diameter. The particular fitting that fell apart was a K24B-12D (1.5" to ¾" reducer). Other sizes of the KC-152 fitting were evaluated and errors in the drawing were found between conversions of 79K80266 (Union, Butt-weld Reducer) to KSC-GP-425 (Fluid Fitting Engineering Standards). The dimension errors have been present since 1990, and the K12G-4A fitting has had dimension errors since 1979. Some sizes cannot be manufactured with the listed dimensions while others have an under-sized wall thickness in the transition region. No known problems have occurred in any of the in-service KC-152s. KC-152 is a KSC drawing and is manufactured by multiple vendors. In addition, old versions of the 79K80266 were evaluated for previous changes that may have caused the issues in KSC-GP-425.

Summary
The buttweld reducer fitting series, KC-152, was found to have errors in the drawing KSC-GP-425. Of the 39 reducers analyzed per ASME B31.3, two failed the criteria, four have thin-walls but passed, and four cannot be manufactured as dimensioned. The report, KSC-TA-9724, details the analysis and makes initial recommendations for correcting the fittings. TA-B2B initiated an initial safety alert, NA-KSC-2008-01, to notify KSC and other potential users of the possible discrepancies within the fitting dimensions.

The dimensional analysis of each fitting was discussed. Due to multiple drawing dimension changes in the past and the vast discrepancies of the transitional wall thickness from fitting to fitting, NE-F2, TA-B2B and NE-M1 decided to utilize the 79K80266 rev.E drawing values as the baseline fitting dimensions. It was also decided to make the transition wall thickness equally proportioned to the wall thickness of the larger end opening for all fittings. NE-M1 and TA-B2Bs analysis and report shows that if the transition wall thickness is sized to at least equal the large end wall thickness, then the fitting meets ASME B31.3. A joint discussion between NE-F2, TA-B2B and NE-M1 concluded that the transition wall thickness should be at least 1.25x's the thickness of the large opening wall thickness. This thickness ratio was determined to allow for a larger margin of safety without interfering with the butt weld area heat affected zone.

Once a thickness ratio was determined, new dimensions were used to create a ProE model to verify the transition area thickness. The new dimensions were achieved by decreasing the "H" value of the fitting. The "H" value is a depth dimension on the inner portion of the larger end of the fitting. This allows for all the fittings to have a transition wall thickness 25% larger than the wall of the large diameter end. The validity of the new values was confirmed by the predominant vendor Allan Aircraft in January 2009.

APPENDIX B:
KC-116 Fitting Dimensional Change Justification

Background
Allan Aircraft discovered a problem with the dimensions of the KC 116 NPT-Flared Tube adapter fitting while attempting to manufacture it and informed NASA Fluid Design, NE-F2. The KC 116 drawing defines various NPT-Flared Tube adapters ranging in size from 1/4" to 2" diameter. The particular fitting in question is the KC 116 / 20-20 adapter. The specific discrepancy between the KC 116 standard and an industry standard
SAE AS 4309 / 20-20 is in the size of the wrench hex. KC 116 / 20-20 specifies wrench hex size of 1.75" whereas SAE AS 4309 / 20-20 specifies a wrench hex size of 1.688". More detailed research into older versions of KSC Fluid Fitting Engineering Standards
(NASA / KSC-GP 425) has shown that the change of wrench hex size for the
KC 116 / 20-20 fitting had occurred in the GP 425-E revision. No reason for this change was documented.

Summary
Inquiry into the details of the specific adapters has shown that all SAE AS 4309 / 20-XX series use a wrench hex size of 1.688". The KC 116 / 20-XX also use the more common 1.688" wrench hex size except for the KC 116 / 20-20 which is the only fitting that utilizes the 1.75" wrench hex size. Approach to standardizing the dimension of
KSC 116 / 20-20 was twofold: stress analysis, and other dimensional fitting standards including international standards and current SAE standards.

Stress analysis of the KC 116 / 20-20 fitting focused on the strength of the design and stress induced damage to the wrench hex during maximum torque installation (1800 in-lbs). Both cases, 1.688" and 1.75", were analyzed for potential distortion of the wrench hex flats during maximum torque installation procedure. For illustration of this effect see **Figure 1**.

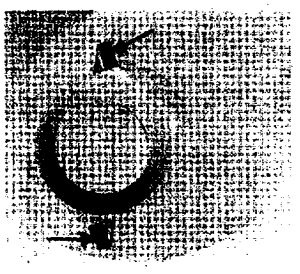

Figure 1: Stress concentration due to clearance; dark shaded areas, indicated by arrows, designate where stress exceeds elastic deformation limit and permanent damage to fitting occurs due to plastic deformation of fitting material.

The results of the calculations show less than 5% difference in induced stress thus resulting in only minor difference in deformation to the wrench hex flats. This difference in deformation of the wrench hex flats is negligible. Since the body of the fitting does not change between the two

wrench hex options, the stresses induced due to internal pressure are identical and therefore within the original design limits. Stress limitations were thus eliminated as the cause for using the 1.75" wrench hex size as opposed to the 1.688" wrench hex size.

Second criterion investigated in order to determine the possible change in the design of KC 116 / 20-20 involved examination of dimensioning of similar fittings and comparison of the KC 116 fitting standard with other U.S. and world wide dimensioning standards such as: ASME, ANSI, SAE, DIN, ISO, and JIS. Careful examination of each standard yielded nearly the same result. For a given style of an adapter, the mechanical fastening system remains the same, i.e. the wrench hex on a specific size fitting remains constant for each variation of that particular fitting. In many instances, DIN, ISO, and JIS standards follow an SAE standard for sizing the wrench hex. Examination of the SAE J512, SAE J513, and SAE J514 standards for the AS4309 style fitting shows that the 20- family of fittings retains a wrench hex size of 1.688".

Recommendation
After considerable discussion, research, and analysis, no reasonable cause for retaining the 1.75" wrench hex dimension on the KC 116 / 20-20 fitting could be found. Therefore a recommendation to change the wrench hex size to 1.688" on the KC 116 / 20-20 fitting to more closely follow the SAE established standard dimensions is warranted. This change will allow KSC engineering to closely follow the established norms and practices of the rest of the fluid engineering community and remain in compliance with the current ISO and SAE standards.

STANDARDIZATION DOCUMENT IMPROVEMENT PROPOSAL

INSTRUCTIONS

1. The preparing activity must complete blocks 1, 2, 3, and 8. In block 1, both the document number and revision letter should be given.
2. The submitter of this form must complete blocks 4, 5, 6, and 7.
3. The preparing activity must provide a reply within 30 days from receipt of the form.

NOTE: This form may not be used to request copies of documents, nor to request waivers or clarification of requirements on current contracts. Comments submitted on this form do not constitute or imply authorization to waive any portion of the referenced document or to amend contractual requirements.

I RECOMMEND A CHANGE:	1. DOCUMENT NUMBER GP-425, Rev. G	2. DOCUMENT DATE September 8, 1997

3. DOCUMENT TITLE
Fluid Fitting Engineering Standards

4. NATURE OF CHANGE *(Identify paragraph number and include proposed rewrite, if possible. Attach extra sheets as needed.)*

5. REASON FOR RECOMMENDATION

6. SUBMITTER

a. NAME *(Last, First, Middle Initial)*	b. ORGANIZATION	
c. ADDRESS *(Include Zip Code)*	d. TELEPHONE *(Include Area Code)*	7. DATE SUBMITTED

8. PREPARING ACTIVITY

a. NAME	d. TELEPHONE *(Include Area Code)*
Director of Engineering Development	(407) 867-2565

c. ADDRESS *(Include Zip Code)*
National Aeronautics and Space Administration, Mail Code: DE
Kennedy Space Center, FL 32899

KSC FORM 21-610NS (2/94) (C/G 2/94)